DIGITAL SIGNAGE
2019-2020

VESTEL

www.vestelvisualsolutions.com

Vestel Digital Signage

ENTRY SIGNAGE DISPLAYS
ED SERIES 6

SMART SIGNAGE DISPLAYS
STM SERIES 7

ULTRA HD SIGNAGE DISPLAYS
UHM SERIES 8

PROFESSIONAL SIGNAGE DISPLAYS
PDM SERIES 9

PROFESSIONAL HIGH-BRIGHT SIGNAGE DISPLAYS
PDH SERIES 10

PROFESSIONAL UHD SIGNAGE DISPLAYS
PDU SERIES 11

PROFESSIONAL EXTRA BRIGHT SIGNAGE DISPLAYS
PDX SERIES 12

TOTEM
TO SERIES 13

VALUE SIGNAGE DISPLAYS
VB SERIES 14

PROFESSIONAL VALUE SIGNAGE DISPLAYS
VM SERIES 15

QUALITY SIGNAGE DISPLAYS
QF SERIES 16

PROFESSIONAL QUALITY SIGNAGE DISPLAYS
QM SERIES 17

HIGH BRIGHT QUALITY SIGNAGE DISPLAYS
QP SERIES 18

ACCESSORIES 19
OPS
TOUCH OVERLAY
MOTORIZED STAND

TECHNICAL DATA AND SPECIFICATIONS 20-54

COMPANY PROFILE

Vestel City, which comprises nine plants located in Manisa, is amongst the biggest industrial complexes of the world.

As one of the leading enterprises in Turkey, Vestel is a major player in consumer electronics, mobile technologies, household appliances, professional displays and Led lighting with renowned products, including television sets, educational, hospitality and digital signage solutions, digital set-top boxes, tablet PCs, smart phones, refrigerators, washing machines, cooking appliances, dishwashers, air conditioners, and water heaters.

The company is recognised for its cutting-edge designs, high product quality, large production capacity, and superior market share growth.

Vestel offers a wide range of visual solution products for retail, corporate, hospitality, betting, transportation and education sectors. Vestel visual solutions are designed to fit various environmental requirements with a long lifetime and low power consumption. The unique designs also help reducing operational and maintanence costs with increased return over investment.

Manufacturing at the highest quality standards requires discipline as well as knowledge and experience.

All Vestel products are tested in-house in the company's certified quality

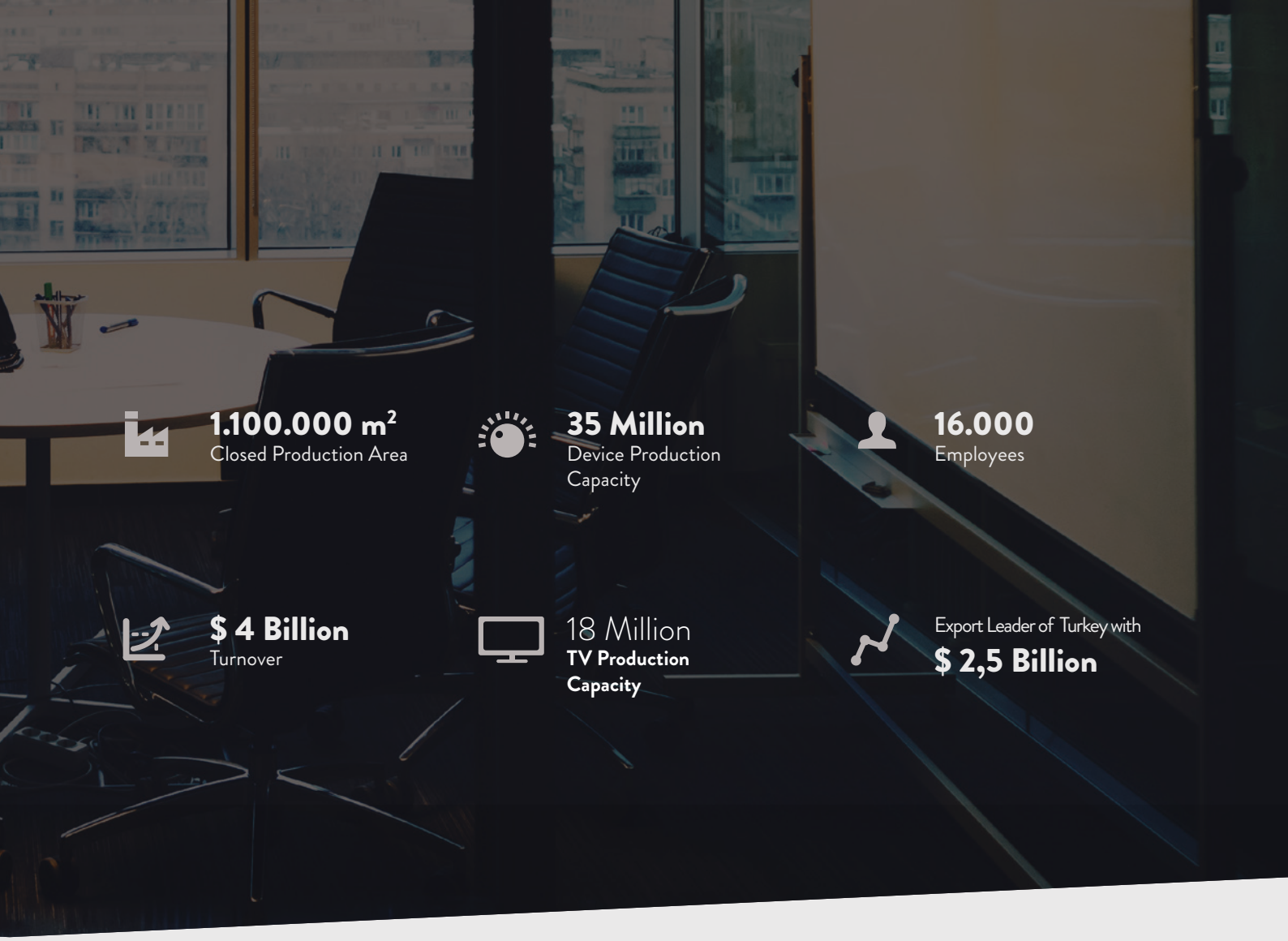

labs to ensure electronic and mechanical sustainability.

Vestel places the utmost importance to product design and development. The company invests in new technological developments continuously to lead the electronics and household appliance markets.

R&D facilities located in Manisa, İstanbul, United Kingdom, and China employ the highest caliber engineers to develop hardware and software solutions that provide clients with world-class quality products.

Vestel has proven its success in product design by receiving the most prestigious design awards every year from well-known industrial design organisations for a variety of products.

Vestel Trade, the company responsible for the marketing and sales of Vestel products overseas, exports 73% percent of its production under leading Japanese and European brands to 155 countries.

Distributing its products to seven continents, Vestel takes its place as a world-class company.

GLOBAL OPERATIONS

Manufacturing & Assembly Plants

TV, Set-top Boxes
Manisa, Turkey

Professional Displays, Tablet PC, Smart Phone, LED lighting
Manisa, Turkey

Refrigerator, Washing Machine, Dishwasher, Tumble Dryer, Cooking Appliances, Air Conditioner, Water Heater
Manisa, Turkey

Marketing & Sales Companies

Vestel Trade, Turkey
Vestel France, France
Vestel Germany, Germany
Vestel UK, United Kingdom
Vestel Iberia, Spain
Vestel Poland, Poland
Vestel Benelux, Netherlands
Vestel CIS Ltd, Russia
Vestel Electronica, Romania
Vestel Central Asia, Kazakhstan
Vestel Electronics Gulf, Dubai

R&D Centers

Manisa, Turkey
Istanbul, Turkey
Bristol, United Kingdom
Shanghai, China

Entry Signage Displays
ED Series

24”/ 32” / 43”

Resolution:
24”: 1366x768 (HD)
32” & 43”: 1920x1080 (FHD)
Brightness: 350 cd/m²
Operation: 16/7
Bezel: 21-25 mm (T/R/L), 13-16 mm (B)
Interface: HDMI 2.0 / DP 1.2A / USB / RS232 / RJ45 / Audio / Speaker

ED series is designed to meet your everyday needs, with a perfect combination of value and features.

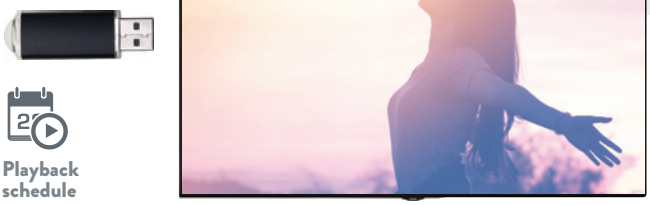

USB Content Scheduling

USB content scheduling optimizes content playback and operation efficiently while setting up playing times through each day and week. You can clone and distribute the scheduling setup to other displays through a USB plug-in.

SoC

HTML-5 based applications can be developed to work directly within the SoC platform of our displays. The displays are capable of working in either online or offline mode.

USB Autoplay

USB Autoplay makes content playback simple and effortless. Simply plug your USB memory containing images or video files and the display can begin playback automatically.

Playlist Creation

Playlists can be easily created by the user, allowing up to 4 different combinations of images and videos in specific order. These can then be selected and played at the desired time, using the built in scheduler.

Smart Signage Displays
STM Series

43” / 49”

Resolution: 1920x1080 (FHD)
Brightness: 400 cd/m²
Operation: 16/7
Bezel: 9-11 mm (T/R/L), 13-15 mm (B)
Interface: HDMI 2.0 / VGA / USB / RS232 / RJ45 / RJ12 for sensors / IR / HP / Audio / Speaker

STM series products gives you different possibilities of use, such as a reliable information display with good picture quality or a powerful kiosk by adding touch overlay and OPS.

HDMI Wake Up

To maximize the user experience while using external video devices such as mediaplayers, display controllers or PCs, all our devices have HDMI Wakeup feature ready to turn on/off the display by simply pluging/unplugging the HDMI cable.

Boot Up Picture

Display your company logo or other messaging during boot up, or when no signal is received.

SoC

HTML-5 based applications can be developed to work directly within the SoC platform of our displays. The displays are capable of working in either online or offline mode.

USB Content Scheduling

USB Content schedules allows you to create playlists of content and schedule them throughout the week. These can then be cloned across multiple displays through USB cloning.

Ultra HD Signage Displays
UHM Series

65” / 75” / 86”

Resolution: 3840x2160 (UHD)
Brightness: 400 cd/m²
Operation: 16/7
Bezel: 16-39 mm (T/R/L), 21-39 mm (B)
Interface: HDMI 2.0 / VGA / USB / RS232 / RJ45 / RJ12 / IR / HP / Audio / Speaker

Eye-catching images can be shown in clarity on UHM products with high resolution and High Dinamic Range of colors. Powerful system of screen can work anywhere without need of any other source.

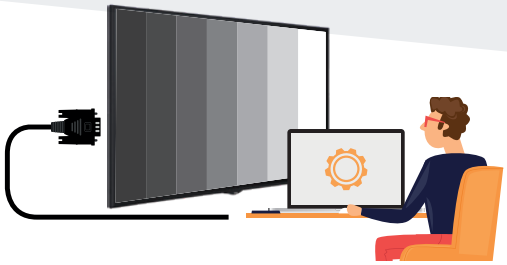

Display Control over RS232 and LAN

Our platform allows users to control their displays, using a large range of commands through either a Local Area Network or direct RS232 Serial connection.

Wireless Display

Using either Microsoft Wireless Display Adaptor or Android Screen Sharing functions on Windows and Android devices, you can mirror screen to the display using embedded wireless display capabilities without using any external devices or cables.

Menu Lock

The menu lock feature allows the displays menus to be locked after installation in order to prevent any changes or access whilst being used in a public area.

SoC

HTML-5 based applications can be developed to work directly within the SoC platform of our displays. The displays are capable of working in either online or offline mode.

Professional Signage Displays
PDM Series

43” / 49” / 55”

Resolution: 1920x1080 (FHD)
Brightness: 400 cd/m²
Operation: 24/7
Bezel: 9-11 mm (T/R/L), 13-15 mm (B)
Interface: HDMI 2.0 / VGA / USB / RS232 / RJ45 / RJ12 / IR / HP / Audio / Speaker

PDM is a professional platform designed to work in any orientation throughout the day. These screens can deliver your advertisements effectively and captivate your customers.

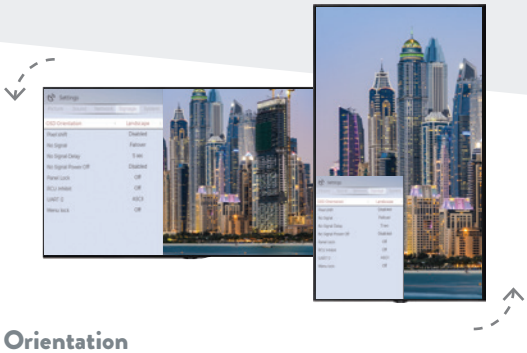

OSD Orientation

The orientation of the OSD can be adjusted to improve its ease of use whilst displaying content in portrait.

Detachable Logo

Detachable logo allows you to put the logo desired positon. Either portrait or landscape mode your logo presented in a good placement. Also you can remove the logo if it is blocking you to use more screens together.

IP Streaming Support

Our processors in the displays make it easier to manage content through many devices. IP video streaming protocols such as RTSP/RTP/HLS and UDP Multicast are supported for real-time content streaming. So that, live broadcasts can be displayed in this way.

Display Control over RS232 and LAN

Our platform allows users to control their displays, using a large range of commands through either a Local Area Network or direct RS232 Serial connection.

Professional High Bright Signage Displays

PDH Series

43” / 49” / 55”

Resolution: 1920x1080 (FHD)
Brightness: 700 cd/m²
Operation: 24/7
Bezel: 7-11 mm (T/R/L), 13-14 mm (B)
Interface: HDMI 2.0 / VGA / USB / RS232 / RJ45 / RJ12 / IR / HP / Audio / Speaker

Show entertaining and lasting images to your customer with PDH series, even in brightly lit locations at your work place. With powerful built in solutions you can effortlessly show material without the need for external playback devices.

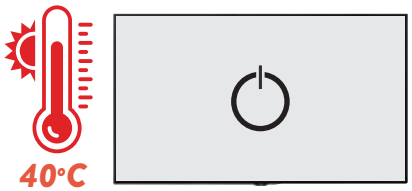

Temperature Control

You can manage the internal conditions to maximise the life of your product by using temperature settings. This feature allows you to determine max shutdown temperature to ensure about the reliability of your signage display. You can also simultaneously get the information of cabinet temperature to your CMS system by using RS232 commands.

Display Control over RS232 and LAN

Our platform allows users to control their displays, using a large range of commands through either a Local Area Network or direct RS232 Serial connection.

Pixel Shifting

The Pixel Shifting feature can be activated in order to reduce the potential risk of image sticking when static content is displayed over long periods of time. The feature periodically shifts the image on the display, without causing any interference of the visual experience

Brightness Scheduler

Customization of a range of brightness levels via manual setup without any sensor requirement is made available using the brightness scheduling feature. The feature also helps to decrease the energy expenses while saving the environment and extending the life of the monitor.

Professional UHD Signage Displays
PDU Series

75” / 86” / 98”

Resolution: 3840x2160 (UHD)
Brightness:
75”: 600 cd/m²
86” & 98”: 500 cd/m²
Operation: 24/7
Bezel: 16-39 mm (T/R/L), 21-39 mm (B)
Interface: HDMI 2.0 / VGA / USB / RS232 / RJ45 / RJ12 / IR / HP / Audio / Speaker

These large screen professional displays are designed to deliver maximum impact at crystal clear UHD resolution.

Signal Failover

Our displays have a protection for “No Signal”. If the source is disconnected, the display will either show your customized banner or search for any other signal from video sources. Since blank screen is the worst case scenario for advertisement, failover is one of the critical feature in our signage displays.

Display Control over RS232 and LAN

Our platform allows users to control their displays, using a large range of commands through either a Local Area Network or direct RS232 Serial connection.

Scheduler

The built in scheduler is one of the many important included features. Thescheduler allows you to plan daily routines of when the display is powered on or off, along with selection of different sources or USB playlists.

Pixel Shifting

The Pixel Shifting feature can be activated in order to reduce the potential risk of image sticking when static content is displayed over long periods of time. The feature periodically shifts the image on the display, without causing any interference of the visual experience.

Professional Extra Bright Signage Displays
PDX Series

55” / 75”

Resolution:
55” & 75”: 1920x1080 (FHD)
75”-1000 cd/m²: 3840x2160 (UHD)
Brightness: 1000, 2500 cd/m²
Operation: 24/7
Bezel: 38 mm (T/R/L), 38 mm (B)
Interface: HDMI 2.0 / VGA / USB / RS232 / RJ45 / RJ12 / IR / HP / Audio / Speaker

The highest brightness levels with many scheduling functions makes this product suitable for high sunlight closures suitable for indoor and semi-outdoor environments.

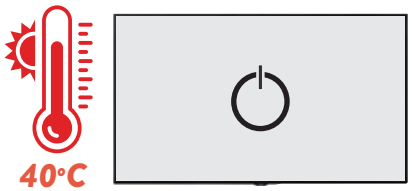

Temperature Control

Temperature control allows you to set an internal temperature limit for the display. The monitoring system will ensure the display is shutdown when that temperature is reached. You can also receive this temperature information through RS232 or SNMP for monitoring on external systems

Display Control over RS232 and LAN

Our platform allows users to control their displays, using a large range of commands through either a Local Area Network or direct RS232 Serial connection.

Brightness Scheduler

Customization of a range of brightness levels via manual setup without any sensor requirement is made available using the brightness scheduling feature. The feature also helps to decrease the energy expenses while saving the environment and extending the life of the monitor.

Pixel Shifting

The Pixel Shifting feature can be activated in order to reduce the potential risk of image sticking when static content is displayed over long periods of time. The feature periodically shifts the image on the display, without causing any interference of the visual experience.

Totem
TO Series

Create your own high impact, customized advertising solution with our robust and cost-effective Totems.

Robust Design

Offering an eye-catching as well as robust design, our slim, stand-alone Totem can provide built-in PC functionality, giving you a self-contained content management system.

Double-Sided

Vestel's Totem offers a double sided display option, enabling your branding to reach more people.

Market Specific

Offering a flexible signage solution, our Totem is perfect for a wide variety of applications, working well for multiple vertical markets, such as the transport and entertainment industries.

Value Signage Displays
VB Series

49” / 55”

Resolution: 3840x2160 (UHD)
Brightness: 350 cd/m²
Operation: 16/7
Bezel: 10 mm (T/R/L), 14-16 mm (B)
Interface: HDMI 2.0 / VGA / USB / RS232 / RJ45 / RJ12 / IR / HP / Audio / Speaker

The new VB series has been created to suit everyday needs, with a perfect combination of value and features.

Embedded CMS

The embedded content management system allows easy access to your playback library, templates and scheduler. Using simple and intuitive menus and layout options, it allows easy content management for small enterprises.

URL Startup

Along with multiple start up options, it is possible to add a specific URL which will be opened automatically when the browser is launched, or the display is switched on.

DAP (Dolby Audio Processing) Technology

Our displays provides a comprehensive sound performance by using Dolby’s latest technology DAP. With embedded DAP Technology, superior sound performance achieves by intelligent audio equalizing, dialog enhancements and surround sound upmixing.

HDR10 & 4K HDMI @60Hz

Displays supporting HDR10 allows HDR based content to be shown, giving a brighter and more dynamic picture. This is further enhanced due to the support of 4K 60Hz, allowing ultra sharp, smooth Video content to be presented.

Professional Value Signage Displays
VM Series

49” / 55”

Resolution: 1920x1080 (FHD)
Brightness: 500 cd/m²
Operation: 24/7
Bezel: 10 mm (T/R/L), 14-16 mm (B)
Interface: HDMI 2.0 / VGA / USB / RS232 / RJ45 / RJ12 / IR / HP / Audio / Speaker

The VM series offer higher brightness levels to support installations with higher Ambient light levels. These products incorporate OPS slots in order to allow the displays functionality to be upgraded.

IP Streaming Support

Our processors in the displays make it easier to manage content through many devices. IP video streaming protocols such as RTSP/RTP/HLS and UDP Multicast are supported for real-time content streaming. So that, live broadcasts can be displayed in this way.

Pixel Shifting

The Pixel Shifting feature can be activated in order to reduce the potential risk of image sticking when static content is displayed over long periods of time. The feature periodically shifts the image on the display, without causing any interference of the visual experience.

HDMI Wake Up

To maximize the user experience while using external video devices such as mediaplayers, display controllers or PCs, all our devices have HDMI Wakeup feature ready to turn on/off the display by simply pluging/unplugging the HDMI cable.

Scheduler

The built in scheduler is one of the many important included features. The scheduler allows you to plan daily routines of when the display is powered on or off, along with selection of different sources or USB playlists.

Quality Signage Displays
QF Series

49” / 55” / 65”

Resolution: 3840x2160 (UHD)
Brightness: 500 cd/m²
Operation: 16/7
Bezel: 6.9-9.7 mm (T/R/L), 10.6-13.4 mm (B)
Interface: HDMI 2.0 / VGA / USB / RS232 / RJ45 / RJ12 / IR / HP / Audio / Speaker

Slim and sleeky design QF series create high visual impact. You can engage your customers easily and deliver superior information and advertisement clarity.

Embedded CMS

The embedded content management system allows easy access to your playback library, templates and scheduler. Using simple and intuitive menus and layout options, it allows easy content management for small enterprises.

ADA Compliance

The New QF series is designed to be ADA compatible. Thanks to its Slim design the QF Series along with Vestel’s specifically designed wall mount kit is suitable for compact installations.

Sensor Support

With the support of external sensors, as temperature, proximity and ambient light, you can observe what is happening around your screens. This can help you to make screens work efficiently and safely for energy saving and error prevention when temperature gets too high.

HDR10 & 4K HDMI @60Hz

Displays supporting HDR10 allows HDR based content to be shown, giving a brighter and more dynamic picture. This is further enhanced due to the support of 4K 60Hz, allowing ultra sharp, smooth Video content to be presented.

Professional Quality Signage Displays

QM Series

49” / 55” / 65”

Resolution:
49” & 55”: 1920x1080 (FHD)
65”: 3840x2160 (UHD)
Brightness: 500 cd/m^2
Operation: 24/7
Bezel: 6.9-9.7 mm (T/R/L), 10.6-13.4 mm (B)
Interface: HDMI 2.0 / VGA / USB / RS232 / RJ45 / RJ12 / IR / HP / Audio / Speaker

Create Compelling customer engagement continuously with your QM series. Designed for long working hours, with a slim cabinet design, this powerful platform delivers lifelike quality all the time.

SDM Ready

With the change comes for OPS and Display computing cards, QM series also give customer to choose between OPS or SDM module. You can order your product either as OPS ready or SDM ready.

Pixel Shifting

The Pixel Shifting feature can be activated in order to reduce the potential risk of image sticking when static content is displayed over long periods of time. The feature periodically shifts the image on the display, without causing any interference of the visual experience.

HDMI Wake Up

To maximize the user experience while using external video devices such as mediaplayers, display controllers or PCs, all our devices have HDMI Wakeup feature ready to turn on/off the display by simply pluging/unplugging the HDMI cable.

Scheduler

The built in scheduler is one of the many important included features. The scheduler allows you to plan daily routines of when the display is powered on or off, along with selection of different sources or USB playlists.

High Bright Quality Signage Displays
QP Series

49” / 55”

Resolution: 1920x1080 (FHD)
Brightness: 700 cd/m^2
Operation: 24/7
Bezel: 6.9-9.7 mm (T/R/L), 10.6-13.4 mm (B)
Interface: HDMI 2.0 / VGA / USB / RS232 / RJ45 / RJ12 / IR / HP / Audio / Speaker

You can capture attention with QP series easily with an eye catcher brightness level.
You can promote your content with exceptional visual performance and clarity.
Elevate your traditional content experience with more brighter QP series displays.

Embedded CMS

The embedded content management system allows easy access to your playback library, templates and scheduler. Using simple and intuitive menus and layout options, it allows easy content management for small enterprises.

Brightness Scheduler

Customization of a range of brightness levels via manual setup without any sensor requirement is made available using the brightness scheduling feature. The feature also helps to decrease the energy expenses while saving the environment and extending the life of the monitor.

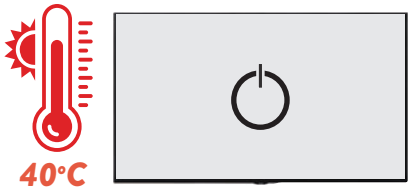

Temperature Control

Temperature control allows you to set an internal temperature limit for the display. The monitoring system will ensure the display is shutdown when that temperature is reached. You can also receive this temperature information through RS232 or SNMP for monitoring on external systems.

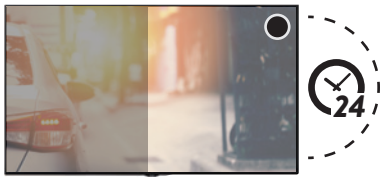

Sensor Support

With the support of external sensors, as temperature, proximity and ambient light, you can observe what is happening around your screens. This can help you to make screens work efficiently and safely for energy saving and error prevention when temperature gets too high.

Accessories

Plugin OPS Module

Vestel's pluggable processors (OPS) are designed to give extra computational power to our displays.

Touch Overlay

Signage displays can be equipped with touch functionality with Touch Overlay accessory. With the help of SoC and touch overlay you can also use displays as PCless Touch Monitor by installing HTML based programs.

Motorized Stand

You will be able to make use of our adjustable motorized stands together with our signage products.

Entry Signage Displays
ED Series

24”/32”/43”

1. DP OUT
2. DP IN
3. USB 1
4. HDMI IN
5. HP
6. 3-WAY BUTTON
7. RJ45
8. USB 2
9. RS232
10. RJ12

KEY SERIES FEATURES

- Playlist Creation
- Usb Auto-Play
- Boot-up Picture
- Display Control
- Signal Failover
- Input Search
- Start Url
- Auto-Launch
- Scheduler
- USB Cloning
- USB Operations
- USB Information
- USB Safe Eject
- Daisychain
- Videowall Settings
- HDMI Wakeup
- HDMI CEC
- Built-in Connectivity
- Built-in WiFi
- Built-in Bluetooth
- Temperature Control
- IP Streaming Support
- OSD Rotation
- Pixel Shifting
- Button Lock
- RCU Lock
- Menu Lock
- Device ID
- Display Lifetime
- Serial Number
- Software Upgrade
- Volume Limit
- Startup Volume
- Headphone Volume
- Power-up Mode
- Power on Delay

ED Series

Model Name	ED24V78/D	ED32V78/D	ED43V78/D
Panel			
Screen Size	24"	32"	43"
Panel Technology	IPS	IPS	IPS
Backlight Type	Edge-Type LED	Edge-Type LED	Direct-Type LED
Brightness (typical)	350 cd/m²	350 cd/m²	350 cd/m²
Native Resolution	1366 x 768 (16:9) - HD	1920 x 1080 (16:9) - FHD	1920 x 1080 (16:9) - FHD
Contrast Ratio (typical)	1000:1	1400:1	1200:1
Dynamic Constrast Ratio	35000:1	35000:1	35000:1
Panel Life Time (Min.)	30000 Hrs	30000 Hrs	30000 Hrs
Response Time (typical)	14 ms	6 ms	6 ms
Active Area (H x V)	521 x 293 mm	698 x 392 mm	941 x 530 mm
Pixel Pitch (H x V)	0.3817 x 0.3817 mm	0.3637 x 0.3637	0.4902 x 0.4902 mm
PPI (pixel per inch)	67	70	52
Viewing Angle	178° Vert., 178° Hor. (89U/89D/89L/89R) @ CR>10	178° Vert., 178° Hor. (89U/89D/89L/89R) @ CR>10	178° Vert., 178° Hor. (89U/89D/89L/89R) @ CR>10
Color Value	16.7 M (8-bit)	16.7 M (8-bit)	16.7 M (8-bit)
Screen Treatment	3H	3H	3H
Haze Level	1%	1%	1%
Refresh Rate	60Hz	60Hz	60Hz
Front Type	VNB	VNB	VNB
Orientation	Horizontal	Landscape	Horizontal
Operation Hours	16/7	16/7	16/7
Area of Usage	Indoor	Indoor	Indoor
Mainboard			
Mainboard Model	17MB130VS	17MB130VS	17MB130VS
Inputs			
HDMI	Yes	Yes	Yes
HDMI Support Type	1 x 2.0	1 x 2.0	1 x 2.0
Display Port	Yes	Yes	Yes
Display Port Type	1 x 1.2a	1 x 1.2a	1 x 1.2a
USB Support Type	2 x 2.0	2 x 2.0	2 x 2.0
RS232	Yes	Yes	Yes
RJ12	Yes	Yes	Yes
LAN (Control)	Yes	Yes	Yes
Outputs			
DisplayPort	1 x 1.2a	1 x 1.2a	1 x 1.2a
Speakers	Yes	Yes	Yes
Speakers output	2 x 2.5 W	2 x 6 W	2 x 8 W
Headphone	Yes	Yes	Yes
Mechanical			
Product Dimensions (WxDxH)	554 x 65 x 337 mm	735 x 68 x 439 mm	971 x 73 x 568
Package Dimensions (WxDxH)	700 x 110 x 418 mm	914 x 115 x 585 mm	1085 x 154 x 750 mm
Product Weight	3.15 kg	5.05 kg	7.75 kg
Package Weight	4.4 kg	7.05 kg	11.25 kg
Vesa Mounting	75 x 75 mm	200 x 100 mm	200 x 200 mm
Bezel Width	B:25 | T:14 | L/R:14 mm	B:25 | T:16 | L/R:16 mm	B:21 | T:13 | L/R:13 mm
Environmental Conditions			
Operating Temperature	0-40°C	0-40°C	0-40°C
Operating Humidity	10-90%	10-90%	10-90%
Power			
Power Supply	110 VAC - 240 VAC - 50/60 Hz	110 VAC - 240 VAC - 50/60 Hz	110 VAC - 240 VAC - 50/60 Hz
Power Consumption			
Typical	22 W	33 W	61 W
Deep Standby	≤0.5W	≤0.5W	≤0.5W
Connectivity Features			
Embedded WiFi	Yes	Yes	Yes
Wireless Screen Casting	Yes	Yes	Yes
Display Info Features			
Set ID	Yes	Yes	Yes
Software Upgrade	Yes	Yes	Yes
Serial Number Access	Yes	Yes	Yes
Model Name Access	Yes	Yes	Yes
Lifetime Display	Yes	Yes	Yes

Model Name	ED24V78/D	ED32V78/D	ED43V78/D
Control Features			
On Screen Menu Rotation	Yes	Yes	Yes
Image Sticking Protection	Yes	Yes	Yes
No Signal Power Off	Yes	Yes	Yes
No Signal Screen Saver	Yes	Yes	Yes
Auto Source Switch	Yes	Yes	Yes
Panel Button Lock	Yes	Yes	Yes
Remote Controller Lock	Yes	Yes	Yes
Device Control over RS232	Yes	Yes	Yes
Device Control over LAN	Yes	Yes	Yes
Auto Color Alignment	Yes	Yes	Yes
Power Up Features			
Power Up Mode Selection	Yes	Yes	Yes
Quick Standby	Yes	Yes	Yes
Delayed Power Up	Yes	Yes	Yes
Auto Launch	Yes	Yes	Yes
HDMI Wakeup	Yes	Yes	Yes
HDMI CEC	Yes	Yes	Yes
Power Up Picture Mode Selection	Yes	Yes	Yes
USB Features			
USB Cloning	Yes	Yes	Yes
USB SW Update	Yes	Yes	Yes
USB Lock	Yes	Yes	Yes
Auto Play	Yes	Yes	Yes
Video Support	Yes	Yes	Yes
Photo Support	Yes	Yes	Yes
Audio Support	Yes	Yes	Yes
Multi Display Features			
Videwall Tiling support	Yes	Yes	Yes
HDCP Support	Yes	Yes	Yes
DP Daisy Chain	Yes	Yes	Yes
Scheduler Settings			
Power-up Time Setting	Yes	Yes	Yes
Power-down Time Setting	Yes	Yes	Yes
Power-up Source Setting	Yes	Yes	Yes
Activate Days Setting	Yes	Yes	Yes
Web Link Features			
HTML5 API Support	Yes	Yes	Yes
Default browser page setting	Yes	Yes	Yes
NTP server setting	Yes	Yes	Yes
Auto CMS webpage setting	Yes	Yes	Yes
Volume Control Features			
Volume Limit Setting	Yes	Yes	Yes
Startup Volume Setting	Yes	Yes	Yes
Volume Fixing	Yes	Yes	Yes
Mechanical Features			
3-way Buttons	Yes	Yes	Yes
Embedded IR Lens	Yes	Yes	Yes
Rocker Switch	Yes	Yes	Yes
Accessories			
Wall Mount Kit	Yes	Yes	Yes
Remote Controller	Yes	Yes	Yes
Remote Controller Batteries	Yes	Yes	Yes
User Manual	Yes	Yes	Yes
Quick Start Guide	Yes	Yes	Yes
Certification			
Safety	Yes	Yes	Yes
EMC	Yes	Yes	Yes
CB	Yes	Yes	Yes
CE	Yes	Yes	Yes

Smart Signage Displays
STM Series

43”/49”

1. HDMI OUT
2. HDMI IN 1
3. HP
4. IR IN
5. HDMI IN 2
6. OPTICAL SPDIF
7. RJ12-SENSORS
8. RJ12
9. AUDIO IN L/R
10. DSUB9-RS232
11. VGA
12. RJ45
13. USB 2
14. USB 1

KEY SERIES FEATURES

- OPS Support
- Touch Support
- USB Secure Cover
- Playlist Creation
- SoC CMS
- HTML5 API Support
- USB Auto-Play
- USB Cloning
- USB Operations
- USB Information
- USB Safe Eject
- Boot-up Picture
- HDMI Wakeup
- HDMI Switching
- HDMI CEC
- HDMI Auto-Switch
- Brightness Scheduling
- Sensor Compatibility
- Improved UI
- Temperature Control
- IP Streaming Support
- Color Calibration(VW)
- Professional Design
- Built-in Connectivity
- Built-in WiFi
- Built-in Bluetooth
- Display Control
- Sensor Support
- Carrying Handles
- IR Extender
- Detachable Logo
- Detachable Power Cord
- OSD Rotation
- Pixel Shifting
- Signal Failover
- Input Search
- Button Lock
- RCU Lock
- Menu Lock
- Device ID
- Display Lifetime
- Serial Number
- Software Upgrade
- Start Url
- OPS Status
- OPS Power Control
- Power-up Mode
- Power on Delay
- Auto-Launch
- Scheduler
- Brightness Scheduling
- Videowall Settings
- Daisychain
- Volume Limit
- Startup Volume
- Headphone Volume

STM Series

Model Name	STM43UH82/2	STM49UH82/2
Panel		
Screen Size	43”	49”
Panel Technology	IPS	IPS
Backlight Type	Direct-Type LED	Direct-Type LED
Brightness (typical)	400 cd/m²	400 cd/m²
Native Resolution	1920 x 1080 (16:9) - FHD	1920 x 1080 (16:9) - FHD
Contrast Ratio (typical)	1000:1	1000:1
Dynamic Constrast Ratio	40000:1	40000:1
Panel Life Time (Min.)	30000 Hrs	30000 Hrs
Response Time (typical)	6 ms	6 ms
Active Area (H x V)	941 x 530 mm	1074 x 605 mm
Pixel Pitch (H x V)	0.4902 x 0.4902 mm	0.5593 x 0.5593 mm
PPI (pixel per inch)	52	45
Viewing Angle	178° Vert., 178° Hor. (89U/89D/89L/89R) @ CR>10	178° Vert., 178° Hor. (89U/89D/89L/89R) @ CR>10
Color Value	16.7 M (8-bit)	16.7 M (8-bit)
Screen Treatment	3H	3H
Haze Level	1%	1%
Refresh Rate	60 Hz	60 Hz
Front Type	Ultra Narrow Bezel	Ultra Narrow Bezel
Orientation	Horizontal	Horizontal
Operation Hours	16/7	16/7
Area of Usage	Indoor	Indoor
Mainboard		
Mainboard Model	17MB135VS	17MB135VS
Monitor Connectivity		
RGB Input	VGA(DE-15F)	VGA(DE-15F)
RGB Output	N/A	N/A
Video Input	2xHDMI2.0, 2xUSB2.0, USB2.0(Internal)	2xHDMI2.0, 2xUSB2.0, USB2.0(Internal)
Video Output	HDMI2.0	HDMI2.0
Audio Input	Line In L/R	Line In L/R
Audio Output	Headphone, Optic SPDIF	Headphone, Optic SPDIF
External Control	RS232(DE-9F), Ethernet(RJ45), Service(RJ12)	RS232(DE-9F), Ethernet(RJ45), Service(RJ12)
External Sensor	RJ12	RJ12
Mechanical		
Product Dimensions (WxDxH)	966 x 106 x 557 mm	1102 x 104 x 635 mm
Package Dimensions (WxDxH)	1050 x 178 x 718 mm	1215 x 165 x 775 mm
Product Weight	10.3 kg	13.7 kg
Package Weight	13.65 kg	17 kg
Vesa Mounting	200 x 200 mm - M6	200 x 200 mm - M6
Bezel Width	B:13 | T:9 | L/R:10 mm	B:15 | T:11 | L/R:11 mm
Environmental Conditions		
Operating Temperature	0-40°C	0-40°C
Operating Humidity	10-90%	10-90%
Power		
Power Supply	110 VAC - 240 VAC - 50/60 Hz	110 VAC - 240 VAC - 50/60 Hz
Power Consumption		
Typical	62 W	83 W
Deep Standby	≤0.5 W	≤0.5 W
Features		
Main Features	Open Content Management Support, Scheduler, USB-Autoplay, Auto-Launch, HDMI-CEC, HDMI-Wakeup, Auto-switch on Failover, Panel Lock	Open Content Management Support, Scheduler, USB-Autoplay, Auto-Launch, HDMI-CEC, HDMI-Wakeup, Auto-switch on Failover, Panel Lock
Mechanical Features	Joystick, IR Extender Support, Rocker Switch, Detachable power cable, Carrying slots, Detachable logo positioning, Internal usb cover, Cable Holder	Joystick, IR Extender Support, Rocker Switch, Detachable power cable, Carrying slots, Detachable logo positioning, Internal usb cover, Cable Holder
Optional Features	OPS Compliance, IR Overlay Touch Compliance	OPS Compliance, IR Overlay Touch Compliance
Speaker	2 x 8 W	2 x 8 W
Accessory		
Standard	QSG, Warranty Card, IB, Power Cord, Remote Control, RC Battery, Mounting Kit, Extension Brackets, IR Extender Cable	QSG, Warranty Card, IB, Power Cord, Remote Control, RC Battery, Mounting Kit, Extension Brackets, IR Extender Cable
Certification		
Safety	Yes	Yes
EMC	Yes	Yes
CB	Yes	Yes
CE	Yes	Yes

Ultra HD Signage Displays
UHM Series

65”/75”/86”

1. HDMI OUT
2. HDMI IN 1
3. HP
4. IR IN
5. HDMI IN 2
6. HDMI IN 3
7. HDMI IN 4
8. OPTICAL SPDIF
9. RJ12-SENSORS
10. RJ12
11. AUDIO IN L/R
12. DSUB9-RS232
13. VGA
14. RJ45
15. USB 2
16. USB 1

KEY SERIES FEATURES

- 4K HDMI @60Hz
- Built-in Connectivity
- Built-in WiFi
- Built-in Bluetooth
- Display Control
- SoC CMS
- HTML5 API Support
- Button Lock
- RCU Lock
- Menu Lock
- HDMI Wakeup
- HDMI Switching
- HDMI CEC
- HDMI Auto-Switch
- Brightness Scheduling
- Sensor Compatibility
- Improved UI
- Temperature Control
- IP Streaming Support
- Color Calibration(VW)
- Playlist Creation
- Professional Design
- Sensor Support
- OPS Support
- Touch Support
- USB Secure Cover
- Carrying Handles
- IR Extender
- Detachable Logo
- Detachable Power Cord
- OSD Rotation
- Pixel Shifting
- Signal Failover
- Input Search
- Device ID
- Display Lifetime
- Serial Number
- Software Upgrade
- Start Url
- OPS Status
- OPS Power Control
- Power-up Mode
- Power on Delay
- Auto-Launch
- Boot-up Picture
- Scheduler
- Brightness Scheduling
- USB Auto-Play
- USB Cloning
- USB Operations
- USB Information
- USB Safe Eject
- Videowall Settings
- Daisychain
- Volume Limit
- Startup Volume
- Headphone Volume

UHM Series

Model Name	UHM55UH82/4	UHM65UH82/4	UHM75UH83/4	UHM86SH80B/4
Panel				
Screen Size	55"	65"	75"	86"
Backlight Type	Direct-Type LED	Direct-Type LED	Direct-Type LED	Edge-Type LED
Brightness (typical)	400 cd/m²	400 cd/m²tt	400 cd/m²	410 cd/m²
Native Resolution	3840 x 2160 (16:9) - UHD	3840 x 2160 (16:9) - UHD	3840 x 2160 (16:9) - UHD	3840 x 2160 (16:9) - UHD
Contrast Ratio (typical)	1200:1	1200:1	1200:1	1200:1
Dynamic Constrast Ratio	40000:1	40000:1	40000:1	41000:1
Panel Life Time (Min.)	30000 Hrs	50000 Hrs	30000 Hrs	30000 Hrs
Response Time (typical)	6 ms	5 ms	8 ms	8 ms
Active Area (H x V)	1210 x 681 mm	1428 mm (H) x 804 mm (V)	1650 x 928 mm	1895 x 1066 mm
Pixel Pitch (H x V)	0.315 x 0.315 mm	0.372 x 0.372 mm	0.429 x 0.429 mm	0.4935 x 0.4935 mm
PPI (pixel per inch)	81	68	59	52
Viewing Angle	178° Vert., 178° Hor. (89U/89D/89L/89R) @ CR>10	178° Vert., 178° Hor. (89U/89D/89L/89R) @ CR>10	178° Vert., 178° Hor. (89U/89D/89L/89R) @ CR>10	178° Vert., 178° Hor. (89U/89D/89L/89R) @ CR>10
Color Value	1.07 B (10-bit)	1.07 B (10-bit)	1.07 B (10-bit)	1.07 B (10-bit)
Screen Treatment	3H	60 Hz	2H	2H
Haze Level	1%	3%	3%	3%
Refresh Rate	60 Hz	60 Hz	60 Hz	60 Hz
Front Type	Ultra Narrow Bezel	Ultra Narrow Bezel	Ultra Narrow Bezel	SNB
Orientation	Horizontal	Horizontal	Horizontal / Vertical	Horizontal / Vertical
Operation Hours	16/7	16/7	16/7	16/7
Area of Usage	Indoor	Indoor	Indoor	Indoor
Mainboard				
Mainboard Model	17MB135VS	17MB135VS	17MB135VS	17MB135VS
Monitor Connectivity				
RGB Input	VGA(DE-15F)	VGA(DE-15F)	VGA(DE-15F)	VGA(DE-15F)
RGB Output	N/A	N/A	N/A	N/A
Video Input	4xHDMI2.0, 2xUSB2.0, USB2.0(Internal)	4xHDMI2.0, 2xUSB2.0, USB2.0(Internal)	4xHDMI2.0, 2xUSB2.0, USB2.0(Internal)	4xHDMI2.0, 2xUSB2.0, USB2.0(Internal)
Video Output	HDMI2.0	HDMI2.0	HDMI2.0	HDMI2.0
Audio Input	Line In L/R	Line In L/R	Line In L/R	Line In L/R
Audio Output	Headphone, Optic SPDIF	Headphone, Optic SPDIF	Headphone, Optic SPDIF	Headphone, Optic SPDIF
External Control	RS232(DE-9F), Ethernet(RJ45), Service(RJ12)	RS232(DE-9F), Ethernet(RJ45), Service(RJ12)	RS232(DE-9F), Ethernet(RJ45), Service(RJ12)	RS232(DE-9F), Ethernet(RJ45), Service(RJ12)
External Sensor	RJ12	RJ12	RJ12	RJ12
Mechanical				
Product Dimensions (WxDxH)	1238 x 104 x 712 mm	1459 x 99 x 853 mm	1684 x 100 x 967 mm	1975 x 103 x 1146 mm
Package Dimensions (WxDxH)	1369 x 165 x 874 mm	1607 x 177 x 980 mm	1948 x 210 x 1170 mm	2163 x 318 x 1405 mm
Product Weight	17.05 kg	24.45 kg	37.2 kg	65.8 kg
Package Weight	21.65 kg	31.85 kg	50.2 kg	85.6 kg
Vesa Mounting	400 x 200 mm - M6	400 x 400 mm - M6	600 x 400 mm - M6	600 x 400 mm - M6
Bezel Width	B:14 | T:11 | L/R:11 mm	B:21 mm | T:15 mm | L/R:15 mm	B:21 | T:16 | L/R:16 mm	B:38 | T:38 | L/R:38 mm
Environmental Conditions				
Operating Temperature	0-40°C	0-40°C	0-40°C	0-40°C
Operating Humidity	10-90%	10-90%	10-90%	10-90%
Power				
Power Supply	110 VAC - 240 VAC - 50/60 Hz	110 VAC - 240 VAC - 50/60 Hz	110 VAC - 240 VAC - 50/60 Hz	110 VAC - 240 VAC - 50/60 Hz
Power Consumption				
Typical	97 W	74 W	223 W	254 W
Deep Standby	≤0.5 W	≤0.5W	≤0.5 W	≤0.5 W
Features				
Main Features	Open Content Management Support, Scheduler, USB-Auto-play, Auto-Launch, HDMI-CEC, HDMI-Wakeup, Auto-switch on Failover, Panel Lock	Open Content Management Support, Scheduler, USB-Auto-play, Auto-Launch, HDMI-CEC, HDMI-Wakeup, Auto-switch on Failover, Panel Lock	Open Content Management Support, Scheduler, USB-Auto-play, Auto-Launch, HDMI-CEC, HDMI-Wakeup, Auto-switch on Failover, Panel Lock, OSD Rotation, NoSignalPowerOff, Screen Saver, Pixel shift, Scheduler, Videowall support, remote control via LAN, Real Time Clock	Open Content Management Support, Scheduler, USB-Auto-play, Auto-Launch, HDMI-CEC, HDMI-Wakeup, Auto-switch on Failover, Panel Lock, OSD Rotation, NoSignalPowerOff, Screen Saver, Pixel shift, Scheduler, Videowall support, remote control via LAN, Real Time Clock
Mechanical Features	Joystick, IR Extender Support, Rocker Switch, Detachable power cable, Carrying slots, Detachable logo positioning, Internal usb cover, Cable Holder	Joystick, IR Extender Support, Rocker Switch, Detachable power cable, Carrying slots, Detachable logo positioning, Internal usb cover, Cable Holder	Joystick, IR Extender Support, Rocker Switch, Detachable power cable, Carrying slots, Detachable logo positioning, Internal usb cover, Cable Holder	Joystick, IR Extender Support, Rocker Switch, Detachable power cable, Carrying slots, Detachable logo positioning, Internal usb cover, Cable Holder
Optional Features	OPS Compliance, IR Overlay Touch Compliance	OPS Compliance, IR Overlay Touch Compliance	OPS Compliance, IR Overlay Touch Compliance	OPS Compliance
Speaker	2 x 8 W	2 x 8 W	2 x 12 W	2 x 12 W
Accessory				
Standard	QSG, Warranty Card, IB, Power Cord, Remote Control, RC Battery, Mounting Kit, Extension Brackets, IR Extender Cable	QSG, Warranty Card, IB, Power Cord, Remote Control, RC Battery, Mounting Kit, Extension Brackets, IR Extender Cable	QSG, IB, Power Cord, Remote Control Unit, RC Battery, Mounting Kit, Extension Brackets, IR Extender Cable	QSG, IB, Power Cord, Remote Control Unit, RC Battery, Mounting Kit, Extension Brackets, IR Extender Cable
Certification				
Safety	Yes	Yes	Yes	Yes
EMC	Yes	Yes	Yes	Yes
CE	Yes	Yes	Yes	Yes

Professional Signage Displays
PDM Series

43”/49”/55”

1. HDMI OUT
2. HDMI IN 1
3. HP
4. IR IN
5. HDMI IN 2
6. OPTICAL SPDIF
7. RJ12-SENSORS
8. RJ12
9. AUDIO IN L/R
10. DSUB9-RS232
11. VGA
12. RJ45
13. USB 2
14. USB 1

KEY SERIES FEATURES

- Detachable Logo
- Detachable Cord
- OSD Rotation
- Pixel Shifting
- Signal Failover
- Input Search
- IP Streaming Support
- Playlist Creation
- SoC CMS
- HTML5 API Support
- HDMI Wakeup
- HDMI Switching
- HDMI CEC
- HDMI Auto-Switch
- Brightness Scheduling
- Sensor Compatibility
- Improved UI
- Temperature Control
- Color Calibration(VW)
- Professional Design
- Built-in Connectivity
- Built-in WiFi
- Built-in Bluetooth
- Display Control
- Longer Life Span
- Sensor Support
- OPS Support
- Touch Support
- USB Secure Cover
- Carrying Handles
- IR Extender
- Button Lock
- RCU Lock
- Menu Lock
- Device ID
- Display Lifetime
- Serial Number
- Software Upgrade
- Start Url
- OPS Status
- OPS Power Control
- Power-up Mode
- Power on Delay
- Auto-Launch
- Boot-up Picture
- Scheduler
- USB Auto-Play
- USB Cloning
- USB Operations
- USB Information
- USB Safe Eject
- Videowall Settings
- Daisychain
- Volume Limit
- Startup Volume
- Headphone Volume

PDM Series

Model Name	PDM43UH82/2	PDM49UH82/2	PDM55UH82/2
Panel			
Screen Size	43”	49”	55”
Panel Technology	IPS	IPS	IPS
Backlight Type	Direct-Type LED	Direct-Type LED	Direct-Type LED
Brightness (typical)	400 cd/m²	400 cd/m²	400 cd/m²
Native Resolution	1920 x 1080 (16:9) - FHD	1920 x 1080 (16:9) - FHD	1920 x 1080 (16:9) - FHD
Contrast Ratio (typical)	1000:1	1000:1	1000:1
Dynamic Constrast Ratio	40000:1	40000:1	40000:1
Panel Life Time (Min.)	50000 Hrs	50000 Hrs	50000 Hrs
Response Time (typical)	6 ms	6 ms	6 ms
Active Area (H x V)	941 x 530 mm	1074 x 605 mm	1210 mm (H) x 681 mm (V)
Pixel Pitch (H x V)	0.4902 x 0.4902 mm	0.5593 x 0.5593 mm	0.630 x 0.630 mm
PPI (pixel per inch)	52	45	40
Viewing Angle	178° Vert., 178° Hor. (89U/89D/89L/89R) @ CR>10	178° Vert., 178° Hor. (89U/89D/89L/89R) @ CR>10	178° Vert., 178° Hor. (89U/89D/89L/89R) @ CR>10
Color Value	16.7 M (8-bit)	16.7 M (8-bit)	16.7 M (8-bit)
Screen Treatment	3H	3H	3H
Haze Level	1%	1%	1%
Refresh Rate	60 Hz	60 Hz	60 Hz
Front Type	Ultra Narrow Bezel	Ultra Narrow Bezel	Ultra Narrow Bezel
Orientation	Horizontal / Vertical	Horizontal / Vertical	Horizontal / Vertical
Operation Hours	24/7	24/7	24/7
Area of Usage	Indoor	Indoor	Indoor
Mainboard			
Mainboard Model	17MB135VS	17MB135VS	17MB135VS
Monitor Connectivity			
RGB Input	VGA(DE-15F)	VGA(DE-15F)	VGA(DE-15F)
RGB Output	N/A	N/A	N/A
Video Input	2xHDMI2.0, 2xUSB2.0, USB2.0(Internal)	2xHDMI2.0, 2xUSB2.0, USB2.0(Internal)	2xHDMI2.0, 2xUSB2.0, USB2.0(Internal)
Video Output	HDMI2.0	HDMI2.0	HDMI2.0
Audio Input	Line In L/R	Line In L/R	Line In L/R
Audio Output	Headphone, Optic SPDIF	Headphone, Optic SPDIF	Headphone, Optic SPDIF
External Control	RS232(DE-9F), Ethernet(RJ45), Service(RJ12)	RS232(DE-9F), Ethernet(RJ45), Service(RJ12)	RS232(DE-9F), Ethernet(RJ45), Service(RJ12)
External Sensor	RJ12	RJ12	RJ12
Mechanical			
Product Dimensions (WxDxH)	966 x 106 x 557 mm	1102 x 104 x 635 mm	1238 x 104 x 712 mm
Package Dimensions (WxDxH)	1050 x 178 x 718 mm	1215 x 165 x 775 mm	1369 x 165 x 874 mm
Product Weight	10.3 kg	12.8 kg	17.05 kg
Package Weight	13.65 kg	16.8 kg	21.3 kg
Vesa Mounting	200 x 200 mm - M6	200 x 200 mm - M6	400 x 200 mm - M6
Bezel Width	B:13 | T:9 | L/R:10 mm	B:15 | T:11 | L/R:11 mm	B:14 | T:11 | L/R:11 mm
Environmental Conditions			
Operating Temperature	0-40°C	0-40°C	0-40°C
Operating Humidity	10-90%	10-90%	10-90%
Power			
Power Supply	110 VAC - 240 VAC - 50/60 Hz	110 VAC - 240 VAC - 50/60 Hz	110 VAC - 240 VAC - 50/60 Hz
Power Consumption			
Typical	61 W	82 W	58 W
Deep Standby	≤0.5 W	≤0.5 W	≤0.5 W
Features			
Main Features	Open Content Management Support, Scheduler, USB-Autoplay, Auto-Launch, HDMI-CEC, HDMI-Wakeup, Auto-switch on Failover, Panel Lock	Open Content Management Support, Scheduler, USB-Autoplay, Auto-Launch, HDMI-CEC, HDMI-Wakeup, Auto-switch on Failover, Panel Lock	Open Content Management Support, Scheduler, USB-Autoplay, Auto-Launch, HDMI-CEC, HDMI-Wakeup, Auto-switch on Failover, Panel Lock
Mechanical Features	Joystick, IR Extender Support, Rocker Switch, Detachable power cable, Carrying slots, Detachable logo positioning, Internal usb cover, Cable Holder	Joystick, IR Extender Support, Rocker Switch, Detachable power cable, Carrying slots, Detachable logo positioning, Internal usb cover, Cable Holder	Joystick, IR Extender Support, Rocker Switch, Detachable power cable, Carrying slots, Detachable logo positioning, Internal usb cover, Cable Holder
Optional Features	OPS Compliance, IR Overlay Touch Compliance	OPS Compliance, IR Overlay Touch Compliance	OPS Compliance, IR Overlay Touch Compliance
Speaker	2 x 8 W	2 x 8 W	2 x 8 W
Accessory			
Standard	QSG, IB, Power Cord, Remote Control, RC Battery, Mounting Kit, Extension Brackets, IR Extender Cable	QSG, IB, Power Cord, Remote Control, RC Battery, Mounting Kit, Extension Brackets, IR Extender Cable	QSG, IB, Power Cord, Remote Control, RC Battery, Mounting Kit, Extension Brackets, IR Extender Cable
Certification			
Safety	Yes	Yes	Yes
EMC	Yes	Yes	Yes
CB	Yes	Yes	Yes
CE	Yes	Yes	Yes

Professional High Bright Signage Displays

PDH Series

43”/49”/55”

1. HDMI OUT
2. HDMI IN 1
3. HP
4. IR IN
5. HDMI IN 2
6. HDMI IN 3
7. HDMI IN 4
8. OPTICAL SPDIF
9. RJ12-SENSORS
10. RJ12
11. AUDIO IN L/R
12. DSUB9-RS232
13. VGA
14. RJ45
15. USB 2
16. USB 1

KEY SERIES FEATURES

- Temperature Control
- Brightness Scheduling
- Sensor Compatibility
- Detachable Logo
- Detachable Power Cord
- OSD Rotation
- Pixel Shifting
- Signal Failover
- Input Search
- IP Streaming Support
- Playlist Creation
- SoC CMS
- HTML5 API Support
- HDMI Wakeup
- HDMI Switching
- HDMI CEC
- HDMI Auto-Switch
- Improved UI
- Color Calibration(VW)
- Professional Design
- Built-in Connectivity
- Built-in WiFi
- Built-in Bluetooth
- Display Control
- Longer Life Span
- OPS Support
- Touch Support
- USB Secure Cover
- Carrying Handles
- IR Extender
- Button Lock
- RCU Lock
- Menu Lock
- Device ID
- Display Lifetime
- Serial Number
- Software Upgrade
- Start Url
- OPS Status
- OPS Power Control
- Power-up Mode
- Power on Delay
- Auto-Launch
- Boot-up Picture
- Scheduler
- USB Auto-Play
- USB Cloning
- USB Operations
- USB Information
- USB Safe Eject
- Videowall Settings
- Daisychain
- Volume Limit
- Startup Volume
- Headphone Volume

PDH Series

Model Name	PDH43UH82/4	PDH49UH82/4	PDH55UH82/4
Panel			
Screen Size	43"	49	55"
Panel Technology	IPS	IPS	IPS
Backlight Type	Direct-Type LED	Direct-Type LED	Direct-Type LED
Brightness (typical)	700 cd/m²	700 cd/m²	700 cd/m²
Native Resolution	1920 x 1080 (16:9) - FHD	1920 x 1080 (16:9) - FHD	1920 x 1080 (16:9) - FHD
Contrast Ratio (typical)	1000:1	1000:1	1000:1
Dynamic Constrast Ratio	70000:1	70000:1	70000:1
Panel Life Time (Min.)	50000 Hrs	50000 Hrs	50000 Hrs
Response Time (typical)	6 ms	6 ms	6 ms
Active Area (H x V)	941 x 530 mm	1074 x 605 mm	1210 x 681 mm
Pixel Pitch (H x V)	0.4902 x 0.4902 mm	0.5593 x 0.5593 mm	0.630 x 0.630 mm
PPI (pixel per inch)	52	45	40
Viewing Angle	178° Vert., 178° Hor. (89U/89D/89L/89R) @ CR>10	178° Vert., 178° Hor. (89U/89D/89L/89R) @ CR>10	178° Vert., 178° Hor. (89U/89D/89L/89R) @ CR>10
Display Colours	16.7 M (8-bit)	16.7 M (8-bit)	16.7 M (8-bit)
Screen Treatment	3H	3H	3H
Haze Level	1%	1%	1%
Refresh Rate	60 Hz	60 Hz	60 Hz
Front Type	Ultra Narrow Bezel	Ultra Narrow Bezel	Ultra Narrow Bezel
Orientation	Horizontal / Vertical	Horizontal / Vertical	Horizontal / Vertical
Operation Hours	24/7	24/7	24/7
Area of Usage	Indoor	Indoor	Indoor
Mainboard			
Mainboard Model	17MB135VS	17MB135VS	17MB135VS
Monitor Connectivity			
RGB Input	VGA(DE-15F)	VGA(DE-15F)	VGA(DE-15F)
RGB Output	N/A	N/A	N/A
Video Input	4xHDMI2.0, 2xUSB2.0, USB2.0(Internal)	4xHDMI2.0, 2xUSB2.0, USB2.0(Internal)	4xHDMI2.0, 2xUSB2.0, USB2.0(Internal)
Video Output	HDMI2.0	HDMI2.0	HDMI2.0
Audio Input	Line In L/R	Line In L/R	Line In L/R
Audio Output	Headphone, Optic SPDIF	Headphone, Optic SPDIF	Headphone, Optic SPDIF
External Control	RS232(DE-9F), Ethernet(RJ45), Service(RJ12)	RS232(DE-9F), Ethernet(RJ45), Service(RJ12)	RS232(DE-9F), Ethernet(RJ45), Service(RJ12)
External Sensor	RJ12	RJ12	RJ12
Mechanical			
Product Dimensions (WxDxH)	966 x 106 x 557 mm	1102 x 104 x 635mm	1238 x 104 x 712 mm
Package Dimensions (WxDxH)	1050 x 178 x 718 mm	1215 x 165 x 775mm	1369 x 165 x 874 mm
Product Weight	10.5 kg	12.80 kg	17.1 kg
Package Weight	14 kg	16.80 kg	21.4 kg
Vesa Mounting	200 x 200 mm - M6	200 x 200 mm M6	400 x 200 mm - M6
Bezel Width	B:13 | T:9 | L/R:10 mm	B:15 | T:11 | L/R:11 mm	B:14 | T:11 | L/R:11 mm
Environmental Conditions			
Operating Temperature	0-40°C	0-40°C	0-40°C
Operating Humidity	10-90%	10-90%	10-90%
Power			
Power Supply	110 VAC - 240 VAC - 50/60 Hz	110 VAC - 240 VAC - 50/60 Hz	110 VAC - 240 VAC - 50/60 Hz
Power Consumption			
Typical	80 W	95 W	105 W
Deep Standby	≤0.5 W	≤0.5 W	≤0.5 W
Deep Standby			
Main Features	Open Content Management Support, Scheduler, USB-Autoplay, Auto-Launch, HDMI-CEC, HDMI-Wakeup, Auto-switch on Failover, Panel Lock	Open Content Management Support, Scheduler, USB-Autoplay, Auto-Launch, HDMI-CEC, HDMI-Wakeup, Auto-switch on Failover, Panel Lock	Open Content Management Support, Scheduler, USB-Autoplay, Auto-Launch, HDMI-CEC, HDMI-Wakeup, Auto-switch on Failover, Panel Lock
Mechanical Features	Joystick, IR Extender Support, Rocker Switch, Detachable power cable, Carrying slots, Detachable logo positioning, Internal usb cover, Cable Holder	Joystick, IR Extender Support, Rocker Switch, Detachable power cable, Carrying slots, Detachable logo positioning, Internal usb cover, Cable Holder	Joystick, IR Extender Support, Rocker Switch, Detachable power cable, Carrying slots, Detachable logo positioning, Internal usb cover, Cable Holder
Optional Features	OPS Compliance, IR Overlay Touch Compliance	OPS Compliance, IR Overlay Touch Compliance	OPS Compliance, IR Overlay Touch Compliance
Speaker	2 x 8 W	2 x 8 W	2 x 8 W
Accessory			
Standard	QSG, Warranty Card, IB, Power Cord, Remote Control, RC Battery, Mounting Kit, Extension Brackets, IR Extender Cable	QSG, Warranty Card, IB, Power Cord, Remote Control, RC Battery, Mounting Kit, Extension Brackets, IR Extender Cable	QSG, Warranty Card, IB, Power Cord, Remote Control, RC Battery, Mounting Kit, Extension Brackets, IR Extender Cable
Certification			
Safety	Yes	Yes	Yes
EMC	Yes	Yes	Yes
CB	Yes	Yes	Yes
CE	Yes	Yes	Yes

Professional UHD Signage Displays
PDU Series

75”/86”/98”

1. HDMI OUT
2. HDMI IN 1
3. DP IN
4. DP OUT
5. HP
6. IR IN
7. HDMI IN 2
8. HDMI IN 3
9. HDMI IN 4
10. OPTICAL SPDIF
11. RJ12-SENSORS
12. RJ12
13. AUDIO IN L/R
14. DSUB9-RS232
15. VGA
16. RJ45
17. USB 2
18. USB 1

KEY SERIES FEATURES

- 4K HDMI @60Hz
- Display Control
- Scheduler
- USB Auto-Play
- USB Cloning
- USB Operations
- USB Information
- USB Safe Eject
- Auto-Launch
- Boot-up Picture
- Temperature Control
- Brightness Scheduling
- Sensor Compatibility
- Detachable Logo
- Detachable Power Cord
- OSD Rotation
- Pixel Shifting
- Signal Failover
- Input Search
- IP Streaming Support
- Playlist Creation
- SoC Content Management
- HTML5 API Support
- HDMI Wakeup
- HDMI Switching
- HDMI CEC
- HDMI Auto-Switch
- Improved UI
- Color Calibration(VW)
- Professional Design
- Built-in Connectivity
- Built-in WiFi
- Built-in Bluetooth
- Longer Life Span
- OPS Support
- Touch Support
- USB Secure Cover
- Carrying Handles
- IR Extender
- Button Lock
- RCU Lock
- Menu Lock
- Device ID
- Display Lifetime
- Serial Number
- Software Upgrade
- Start Url
- OPS Status
- OPS Power Control
- Power-up Mode
- Power on Delay
- Videowall Settings
- Daisychain
- Volume Limit
- Startup Volume
- Headphone Volume

PDU Series

Model Name	PDU65UF82/4	PDU75UF83/4	PDU86SF80B/4	PDU98SF81B/4
Panel				
Screen Size	65"	75"	86"	98"
Panel Technology	IPS	IPS	IPS	SVA
Backlight Type	Direct-Type LED	Direct-Type LED	Edge-Type LED	ELED
Brightness (typical)	400 cd/m²	400 cd/m²	500 cd/m²	500 cd/m²
Native Resolution	3840 x 2160 (16:9) - UHD	3840 x 2160 (16:9) - UHD	3840 x 2160 (16:9) - UHD	3840 x 2160 (16:9) - UHD
Contrast Ratio (typical)	1200:1	1200:1	1200:1	4000:1
Dynamic Constrast Ratio	40000:1	40000:1	50000:1	50000:1
Panel Life Time (Min.)	50000 Hrs	50000 Hrs	50000 Hrs	50000 Hrs
Response Time (typical)	8 ms	8 ms	8 ms	6 ms
Active Area (H x V)	1428 mm (H) x 804 mm (V)	1650 x 928 mm	1899 x 1069 mm	2158 x 1214 mm
Pixel Pitch (H x V)	0.372 x 0.372 mm	0.429 x 0.429 mm	0.4935 x 0.4935 mm	0.5621 x 0.5621 mm
PPI (pixel per inch)	68	59	52	45
Viewing Angle	178° Vert., 178° Hor. (89U/89D/89L/89R) @ CR>10	178° Vert., 178° Hor. (89U/89D/89L/89R) @ CR>10	178° Vert., 178° Hor. (89U/89D/89L/89R) @ CR>10	178° Vert., 178° Hor. (89U/89D/89L/89R) @ CR>10
Color Value	1.07 B (10-bit)	1.07 B (10-bit)	1.07 B (10-bit)	16.7 M (8-bit)
Screen Treatment	3H	2H	2H	2H
Haze Level	1%	3%	3%	25%
Refresh Rate	60 Hz	60 Hz	74.25 MHz	60 Hz
Front Type	Ultra Narrow Bezel	Ultra Narrow Bezel	SNB	SNB
Orientation	Horizontal / Vertical	Horizontal / Vertical	Horizontal / Vertical	Horizontal / Vertical
Operation Hours	24/7	24/7	24/7	24/7
Area of Usage	Indoor	Indoor	Indoor	Indoor
Mainboard				
Mainboard Model	17MB135VS	17MB120DSR4-DSOPT7	17MB120DSR4-DSOPT7	17MB120DSR4-DSOPT7
Monitor Connectivity				
RGB Input	VGA(DE-15F)	VGA(DE-15F)	VGA(DE-15F)	VGA(DE-15F)
RGB Output	N/A	N/A	N/A	N/A
Video Input	4xHDMI2.0, 1xDP1.2a, 2xUSB2.0, USB2.0(Internal)	4xHDMI2.0, 1xDP1.2a, 2xUSB2.0, USB2.0(Internal)	4xHDMI2.0, 1xDP1.2a, 2xUSB2.0, USB2.0(Internal)	4xHDMI2.0, 1xDP1.2a, 2xUSB2.0, USB2.0(Internal)
Video Output	HDMI2.0, DP1.2a	HDMI2.0, DP1.2a	HDMI2.0, DP1.2a	HDMI2.0, DP1.2a
Audio Input	Line In L/R	Line In L/R	Line In L/R	Line In L/R
Audio Output	Headphone, Optic SPDIF	Headphone, Optic SPDIF	Headphone, Optic SPDIF	Headphone, Optic SPDIF
External Control	RS232(DE-9F), Ethernet(RJ45), Service(RJ12)	RS232(DE-9F), Ethernet(RJ45), Service(RJ12)	RS232(DE-9F), Ethernet(RJ45), Service(RJ12)	RS232(DE-9F), Ethernet(RJ45), Service(RJ12)
External Sensor	RJ12	RJ12	RJ12	RJ12
Mechanical				
Product Dimensions (WxDxH)	1459 x 99 x 853 mm	1684 x 100 x 967 mm	1975 x 103 x 1146 mm	2236 x 98 x 1292 mm
Package Dimensions (WxDxH)	1607 x 177 x 980 mm	1948 x 210 x 1170 mm	2163 x 318 x 1405 mm	2423 x 380 x 1563 mm
Product Weight	24.45 kg	37.2 kg	65.8 kg	102.3 kg
Package Weight	31.85 kg	50.2 kg	85.6 kg	126.7 kg
Vesa Mounting	400 x 400 mm - M6	600 x 400 mm - M6	600 x 400 mm - M6	900 x 600 mm
Bezel Width	B:21 mm | T:15 mm | L/R:15 mm	B:21 | T:16 | L/R:16 mm	B:38 | T:38 | L/R:38 mm	B:39 | T:39 | L/R:39 mm
Environmental Conditions				
Operating Temperature	0-40°C	0-40°C	0-40°C	0-40°C
Operating Humidity	10-90%	10-90%	10-90%	10-90%
Power				
Power Supply	110 VAC - 240 VAC - 50/60 Hz	110 VAC - 240 VAC - 50/60 Hz	110 VAC - 240 VAC - 50/60 Hz	110 VAC - 240 VAC - 50/60 Hz
Power Consumption				
Typical	TBD	223 W	254 W	498 W
Deep Standby	≤0.5W	≤0.5 W	≤0.5 W	≤ 0.5 W
Features				
Main Features	Open Content Management Support, Scheduler, USB-Auto-play, Auto-Launch, HDMI-CEC, HDMI-Wakeup, Auto-switch on Failover, Panel Lock	Open Content Management Support, Scheduler, USB-Auto-play, Auto-Launch, HDMI-CEC, HDMI-Wakeup, Auto-switch on Failover, Panel Lock, OSD Rotation, NoSignalPowerOff, Screen Saver, Pixel shift, Scheduler, Videowall support, remote control via LAN, Real Time Clock	Open Content Management Support, Scheduler, USB-Auto-play, Auto-Launch, HDMI-CEC, HDMI-Wakeup, Auto-switch on Failover, Panel Lock, OSD Rotation, NoSignalPowerOff, Screen Saver, Pixel shift, Scheduler, Videowall support, remote control via LAN, Real Time Clock	Open Content Management Support, Scheduler, USB-Auto-play, Auto-Launch, HDMI-CEC, HDMI-Wakeup, Auto-switch on Failover, Panel Lock, OSD Rotation, NoSignalPowerOff, Screen Saver, Pixel shift, Scheduler, Videowall support, remote control via LAN, Real Time Clock
Mechanical Features	Joystick, IR Extender Support, Rocker Switch, Detachable power cable, Carrying slots, Detachable logo positioning, Internal usb cover, Cable Holder	Joystick, IR Extender Support, Rocker Switch, Detachable power cable, Carrying slots, Detachable logo positioning, Internal usb cover, Cable Holder	Joystick, IR Extender Support, Rocker Switch, Detachable power cable, Carrying slots, Detachable logo positioning, Internal usb cover, Cable Holder	Joystick, IR Extender Support, Rocker Switch, Detachable power cable, Carrying slots, Detachable logo positioning, Internal usb cover, Cable Holder
Optional Features	OPS Compliance, IR Overlay Touch Compliance	OPS Compliance, IR Overlay Touch Compliance	OPS Compliance	OPS Compliance
Speaker	2 x 8 W	2 x 12 W	2 x 12 W	2x12W
Accessory				
Standard	QSG, Warranty Card, IB, Power Cord, Remote Control, RC Battery, Mounting Kit, Extension Brackets, IR Extender Cable	QSG, IB, Power Cord, Remote Control Unit, RC Battery, Mounting Kit, Extension Brackets, IR Extender Cable	QSG, IB, Power Cord, Remote Control Unit, RC Battery, Mounting Kit, Extension Brackets, IR Extender Cable	QSG, IB, Power Cord, Remote Control Unit, RC Battery, Mounting Kit, Extension Brackets, IR Extender Cable
Certification				
Safety	Yes	Yes	Yes	Yes
EMC	Yes	Yes	Yes	Yes
CB	Yes	Yes	Yes	Yes
CE	Yes	Yes	Yes	Yes

Professional Extra Bright Signage Displays

PDX Series

55”/75”

1. HDMI OUT
2. HDMI IN 1
3. DP IN
4. DP OUT
5. HP
6. IR IN
7. HDMI IN 2
8. HDMI IN 3
9. HDMI IN 4
10. OPTICAL SPDIF
11. RJ12-SENSORS
12. RJ12
13. AUDIO IN L/R
14. DSUB9-RS232
15. VGA
16. RJ45
17. USB 2
18. USB 1

KEY SERIES FEATURES

- Brightness Scheduling
- Sensor Compatibility
- Temperature Control
- Display Control
- Pixel Shifting
- Signal Failover
- Input Search
- Scheduler
- USB Cloning
- USB Operations
- USB Information
- USB Safe Eject
- USB Auto-Play
- HDMI Wakeup
- HDMI Switching
- HDMI CEC
- HDMI Auto-Switch
- Improved UI
- IP Streaming Support
- Color Calibration(VW)
- Playlist Creation
- SoC CMSHTML5 API Support
- Professional Design
- Longer Life Span
- OPS Support
- USB Secure Cover
- Carrying Handles
- IR Extender
- Detachable Logo
- Detachable Power Cord
- OSD Rotation
- Button Lock
- RCU Lock
- Menu Lock
- Device ID
- Display Lifetime
- Serial Number
- Software Upgrade
- Start Url
- OPS Status
- OPS Power Control
- Power-up Mode
- Power on Delay
- Auto-Launch
- Boot-up Picture
- Videowall Settings
- Daisychain
- Volume Limit
- Startup Volume
- Headphone Volume

PDX Series

Model Name	PDX55SF89/4	PDX75SF89/4	PDX75UF86/4
Panel			
Screen Size	55”	75”	75”
Panel Technology	SVA	SVA	IPS
Backlight Type	Direct-Type LED	Direct-Type LED	Direct-Type LED
Brightness (typical)	2500 cd/m²	2500 cd/m²	1000 cd/m²
Native Resolution	1920 x 1080	1920 x 1080	3840 x 2160 (16:9) - UHD
Contrast Ratio (typical)	5000:1	5000:1	1200:1
Dynamic Constrast Ratio	250000:1	250000:1	100000:1
Panel Life Time (Min.)	50000 Hrs	50000 Hrs	50000 Hrs
Response Time (typical)	6 ms	6 ms	8 ms
Active Area (H x V)	1210 x 680 mm	1650 x 928 mm	1650 x 928 mm
Pixel Pitch (H x V)	0.6428 x 0.6428 mm	0.8595 x 0.8595 mm	0.429 x 0.429 mm
PPI (pixel per inch)	40	30	59
Viewing Angle	178° Vert., 178° Hor. (89U/89D/89L/89R) @ CR>10	178° Vert., 178° Hor. (89U/89D/89L/89R) @ CR>10	178° Vert., 178° Hor. (89U/89D/89L/89R) @ CR>10
Display Colours	16.7 M (8-bit)	1.07 B (10-bit)	1.07 B (10-bit)
Screen Treatment	1H	1H	2H
Haze Level	0%	0%	3%
Refresh Rate	120 Hz	120 Hz	60 Hz
Front Type	SNB	SNB	Ultra Narrow Bezel
Orientation	Landscape / Portrait	Landscape / Portrait	Horizontal / Vertical
Operation Hours	24/7	24/7	24/7
Area of Usage	Indoor	Indoor	Indoor
Mainboard			
Mainboard Model	17MB135VS	17MB135VS	17MB135VS
Monitor Connectivity			
RGB Input	VGA(DE-15F)	VGA(DE-15F)	VGA(DE-15F)
RGB Output	N/A	N/A	N/A
Video Input	4xHDMI2.0, 1xDP1.2a, 2xUSB2.0, USB2.0(Internal)	4xHDMI2.0, 1xDP1.2a, 2xUSB2.0, USB2.0(Internal)	4xHDMI2.0, 1xDP1.2a, 2xUSB2.0, USB2.0(Internal)
Video Output	HDMI2.0, DP1.2a	HDMI2.0, DP1.2a	HDMI2.0, DP1.2a
Audio Input	Line In L/R	Line In L/R	Line In L/R
Audio Output	Headphone, Optic SPDIF	Headphone, Optic SPDIF	Headphone, Optic SPDIF
External Control	RS232(DE-9F), Ethernet(RJ45), Service(RJ12)	RS232(DE-9F), Ethernet(RJ45), Service(RJ12)	RS232(DE-9F), Ethernet(RJ45), Service(RJ12)
External Sensor	RJ12	RJ12	RJ12
Mechanical			
Product Dimensions (WxDxH)	1286 x 128 x 757 mm	1727 x 122 x 1005 mm	1684 x 100 x 967 mm
Package Dimensions (WxDxH)	1480 x 265 x 930 mm	1990 x 265 x 1227 mm	1948 x 210 x 1170 mm
Product Weight	38.85 kg	64.15 kg	37
Package Weight	49.45 kg	78.6 kg	52
Vesa Mounting	400 x 400 mm	600 x 400 mm	600 x 400 mm - M6
Bezel Width	B:38 | T:38 | L/R:38 mm	B:39 | T:39 | L/R:39 mm	B:21 | T:16 | L/R:16 mm
Environmental Conditions			
Operating Temperature	0-40°C	0-40°C	0-40°C
Operating Humidity	10-90%	10-90%	10-90%
Power			
Power Supply	110 VAC - 240 VAC / 50-60Hz	110 VAC - 240 VAC / 50-60Hz	110 VAC - 240 VAC - 50/60 Hz
Power Consumption			
Typical	412 W	721 W	240 W
Deep Standby	≤0.5 W	≤0.5 W	≤0.5 W
Power Consumption			
Typical	412 W	721 W	240 W
Deep Standby	≤0.5 W	≤0.5 W	≤0.5 W
Features			
Main Features	Open Content Management Support, Scheduler, USB-Autoplay, Auto-Launch, HDMI-CEC, HDMI-Wakeup, Auto-switch on Failover, Panel Lock, OSD Rotation, NoSignalPowerOff, Screen Saver, Pixel shift, Scheduler, Videowall support, remote control via LAN, Real Time Clock	Open Content Management Support, Scheduler, USB-Autoplay, Auto-Launch, HDMI-CEC, HDMI-Wakeup, Auto-switch on Failover, Panel Lock, OSD Rotation, NoSignalPowerOff, Screen Saver, Pixel shift, Scheduler, Videowall support, remote control via LAN, Real Time Clock	Open Content Management Support, Scheduler, USB-Autoplay, Auto-Launch, HDMI-CEC, HDMI-Hotplug, Auto-switch on Failover, Panel Lock, OSD Rotation, NoSignalPowerOff, Screen Saver, Pixel shift, Scheduler, Videowall support, remote control via LAN, Real Time Clock
Mechanical Features	Joystick, IR Extender Support, Rocker Switch, Detachable power cable, Carrying slots, Detachable logo positioning, Internal usb cover, Cable Holder	Joystick, IR Extender Support, Rocker Switch, Detachable power cable, Carrying slots, Detachable logo positioning, Internal usb cover, Cable Holder	Joystick, IR Extender Support, Rocker Switch, Detachable power cable, Carrying slots, Detachable logo positioning, Internal usb cover, Cable Holder
Optional Features	OPS Compliance	OPS Compliance	OPS Compliance, IR Overlay Touch Compliance
Accessory			
Standard	QSG, IB, Power Cord, Remote Control Unit, RC Battery, Mounting Kit, Extension Brackets, IR Extender Cable	QSG, IB, Power Cord, Remote Control Unit, RC Battery, Mounting Kit, Extension Brackets, IR Extender Cable	QSG, IB, Power Cord, Remote Control Unit, RC Battery, Mounting Kit, Extension Brackets, IR Extender Cable
Certification			
Safety	Yes	Yes	Yes
EMC	Yes	Yes	Yes
CB	Yes	Yes	Yes
CE	Yes	Yes	Yes

Value Signage Displays
VB Series

49”/55”/65”

1. HDMI IN 1
2. HP
3. IR IN
4. HDMI IN 2
5. OPTICAL SPDIF
6. RJ12-SENSORS
7. RJ12
8. AUDIO IN L/R
9. DSUB9-RS232
10. VGA
11. RJ45
12. USB 2
13. USB 1

KEY SERIES FEATURES

- Embedded CMS
- Dolby Audio Processing
- 4K HDMI @60Hz
- Playlist Creation
- SoC CMS
- HTML5 API Support
- Start Url
- Professional Design
- HDMI Wakeup
- HDMI Switching
- HDMI CEC
- HDMI Auto-Switch
- Brightness Scheduling
- Sensor Compatibility
- Improved UI
- Temperature Control
- IP Streaming Support
- Color Calibration(VW)
- Built-in Connectivity
- Built-in WiFi
- Built-in Bluetooth
- Display Control
- Usb Auto-Play
- Longer Life Span
- Sensor Support
- OSD Rotation
- Pixel Shifting
- Signal Failover
- Input Search
- Button Lock
- RCU Lock
- Menu Lock
- Device ID
- Display Lifetime
- Serial Number
- Software Upgrade
- OPS Status
- OPS Power Control
- Power-up Mode
- Power on Delay
- Auto-Launch
- Boot-up Picture
- Scheduler
- USB Cloning
- USB Operations
- USB Information
- USB Safe Eject
- Videowall Settings
- Daisychain
- Volume Limit
- Startup Volume
- Headphone Volume

VB Series

Model Name	VB49B-2	VB55B-2
Panel		
Screen Size	49”	55”
Panel Technology	IPS	VA
Backlight Type	Edge-Type LED	Edge-Type LED
Brightness (typical)	350 cd/m²	350 cd/m²
Native Resolution	3840 x 2160 (16:9) - UHD	3840 x 2160 (16:9) - UHD
Contrast Ratio (typical)	1200:1	6000:1
Dynamic Constrast Ratio	35000:1	35000:1
Panel Life Time (Min.)	30000 Hrs	30000 Hrs
Response Time (typical)	6 ms	8 ms
Active Area (H x V)	1074 x 605 mm	1210 x 680 mm
Pixel Pitch (H x V)	0.2796 x 0.2796 mm	0.3150 x 0.3150 mm
PPI (pixel per inch)	91	81
Viewing Angle	178° Vert., 178° Hor. (89U/89D/89L/89R) @ CR>10	178° Vert., 178° Hor. (89U/89D/89L/89R) @ CR>10
Color Value	1.07 B (10-bit)	1.07 B (10-bit)
Screen Treatment	3H	3H
Haze Level	1%	1%
Refresh Rate	60Hz	60Hz
Front Type	UNB	UNB
Orientation	Horizontal	Horizontal
Operation Hours	16/7	16/7
Area of Usage	Indoor	Indoor
Mainboard		
Mainboard Model	17MB135VS	17MB135VS
Monitor Connectivity		
RGB Input	VGA(DE-15F)	VGA(DE-15F)
RGB Output	N/A	N/A
Video Input	2xHDMI2.0, 2xUSB2.0, USB2.0(Internal)	2xHDMI2.0, 2xUSB2.0, USB2.0(Internal)
Video Output	N/A	N/A
Audio Input	Line In L/R	Line In L/R
Audio Output	Headphone, Optic SPDIF	Headphone, Optic SPDIF
External Control	RS232(DE-9F), Ethernet(RJ45), Service(RJ12)	RS232(DE-9F), Ethernet(RJ45), Service(RJ12)
External Sensor	RJ12	RJ12
Mechanical		
Product Dimensions (WxDxH)	1097 x 69 x 630 mm	1236 x 69 x 709 mm
Package Dimensions (WxDxH)	1195 x 145 x 775 mm	1369 x 145 x 874 mm
Product Weight	TBD	TBD
Package Weight	TBD	TBD
Vesa Mounting	200 x 200 mm	400 x 400 mm
Bezel Width	B:12 | T:8 | L/R:8 mm	B:13 | T:9 | L/R:9 mm
Environmental Conditions		
Operating Temperature	0-40°C	+40°C / 0°C
Operating Humidity	10-90%	0 to 90%
Power		
Power Supply	110 VAC - 240 VAC - 50/60 Hz	110 VAC - 240 VAC - 50/60 Hz
Power Consumption		
Typical	TBD	TBD
Deep Standby	≤0.5W	≤0.5W
Features		
Main Features	Open Content Management Support, Scheduler, USB-Autoplay, Auto-Launch, HDMI-CEC, HDMI-Wakeup, Auto-switch on Failover, Panel Lock	Open Content Management Support, Scheduler, USB-Autoplay, Auto-Launch, HDMI-CEC, HDMI-Wakeup, Auto-switch on Failover, Panel Lock
Mechanical Features	Joystick Rocker Switchcover, Cable Holder	Joystick Rocker Switchcover, Cable Holder
Optional Features	N/A	N/A
Speaker	TBD	TBD
Accessory		
Standard	QSG, IB, Power Cord, Remote Control, RC Battery, Mounting Kit, Extension Brackets	QSG, IB, Power Cord, Remote Control, RC Battery, Mounting Kit, Extension Brackets
Certification		
Safety	Yes	Yes
EMC	Yes	Yes
CE	Yes	Yes

Professional Value Signage Displays
VM Series

49”/55”/65”

1. HDMI IN 1
2. HP
3. IR IN
4. HDMI IN 2
5. OPTICAL SPDIF
6. RJ12-SENSORS
7. RJ12
8. AUDIO IN L/R
9. DSUB9-RS232
10. VGA
11. RJ45
12. USB 2
13. USB 1

KEY SERIES FEATURES

- Scheduler
- Temperature Control
- OSD Rotation
- IP Streaming Support
- Pixel Shifting
- Embedded CMS
- Dolby Audio Processing
- Playlist Creation
- SoC Content Management
- HTML5 API Support
- Start Url
- Professional Design
- HDMI Wakeup
- HDMI Switching
- HDMI CEC
- HDMI Auto-Switch
- Brightness Scheduling
- Sensor Compatibility
- Improved UI
- Color Calibration(VW)
- Built-in Connectivity
- Built-in WiFi
- Built-in Bluetooth
- Display Control
- Usb Auto-Play
- Longer Life Span
- Sensor Support
- Signal Failover
- Input Search
- Button Lock
- RCU Lock
- Menu Lock
- Device ID
- Display Lifetime
- Serial Number
- Software Upgrade
- OPS Status
- OPS Power Control
- Power-up Mode
- Power on Delay
- Auto-Launch
- Boot-up Picture
- USB Cloning
- USB Operations
- USB Information
- USB Safe Eject
- Videowall Settings
- Daisychain
- Volume Limit
- Startup Volume
- Headphone Volume

VM Series

Model Name	VM49B-4H	VM55B-4H
Panel		
Screen Size	49”	55”
Panel Technology	IPS	IPS
Backlight Type	Edge-Type LED	Edge-Type LED
Brightness (typical)	500 cd/m²	500 cd/m²
Native Resolution	1920 x 1080(16:9) - FHD	1920 x 1080 (16:9) - FHD
Contrast Ratio (typical)	1000:1	1200:1
Dynamic Constrast Ratio	50000:1	50000:1
Panel Life Time (Min.)	50000 Hrs	50000 Hr
Response Time (typical)	6 ms	6 ms
Active Area (H x V)	1074 x 605 mm	1210 x 680 mm
Pixel Pitch (H x V)	0.5593 x 0.5593 mm	0.630 x 0.630 mm
PPI (pixel per inch)	45	40
Viewing Angle	178° Vert., 178° Hor. (89U/89D/89L/89R) @ CR>10	178° Vert., 178° Hor. (89U/89D/89L/89R) @ CR>10
Color Value	16.7 M (8-bit)	16.7 M (8-bit)
Screen Treatment	3H	3H
Haze Level	1%	1%
Refresh Rate	60Hz	60Hz
Front Type	UNB	UNB
Orientation	Horizontal/Vertical	Horizontal/Vertical
Operation Hours	24/7	24/7
Area of Usage	Indoor	Indoor
Mainboard		
Mainboard Model	17MB135VS	17MB135VS
Monitor Connectivity		
RGB Input	VGA(DE-15F)	VGA(DE-15F)
RGB Output	N/A	N/A
Video Input	4xHDMI2.0, 2xUSB2.0, USB2.0(Internal)	4xHDMI2.0, 2xUSB2.0, USB2.0(Internal)
Video Output	HDMI 2.0	HDMI 2.0
Audio Input	Line In L/R	Line In L/R
Audio Output	Headphone, Optic SPDIF	Headphone, Optic SPDIF
External Control	RS232(DE-9F), Ethernet(RJ45), Service(RJ12)	RS232(DE-9F), Ethernet(RJ45), Service(RJ12)
External Sensor	RJ12	RJ12
Mechanical		
Product Dimensions (WxDxH)	1097 x 69 x 630 mm	1236 x 69 x 709 mm
Package Dimensions (WxDxH)	1195 x 145 x 775 mm	1369 x 145 x 874 mm
Product Weight	TBD	TBD
Package Weight	TBD	TBD
Vesa Mounting	200 x 200 mm	400 x 400
Bezel Width	B:12 | T:8 | L/R:8 mm	B:13 | T:9 | L/R:9 mm
Environmental Conditions		
Operating Temperature	0-40°C	+40°C / 0°C
Operating Humidity	10-90%	0 to 90%
Power		
Power Supply	110 VAC - 240 VAC - 50/60 Hz	110 VAC - 240 VAC - 50/60 Hz
Power Consumption		
Typical	TBD	TBD
Deep Standby	≤0.5W	≤0.5W
Features		
Main Features	Open Content Management Support, Scheduler, USB-Autoplay, Auto-Launch, HDMI-CEC, HDMI-Wakeup, Auto-switch on Failover, Panel Lock	Open Content Management Support, Scheduler, USB-Autoplay, Auto-Launch, HDMI-CEC, HDMI-Wakeup, Auto-switch on Failover, Panel Lock
Mechanical Features	Joystick, IR Extender Support, Rocker Switch, Detachable power cable, Carrying slots, Detachable logo positioning, Internal usb cover, Cable Holder	Joystick, IR Extender Support, Rocker Switch, Detachable power cable, Carrying slots, Detachable logo positioning, Internal usb cover, Cable Holder
Optional Features	OPS Compliance, IR Overlay Touch Compliance	OPS Compliance, IR Overlay Touch Compliance
Speaker	TBD	TBD
Accessory		
Standard	QSG, IB, Power Cord, Remote Control, RC Battery, Mounting Kit, Extension Brackets, IR Extender Cable	QSG, IB, Power Cord, Remote Control, RC Battery, Mounting Kit, Extension Brackets, IR Extender Cable
Certification		
Safety	Yes	Yes
EMC	Yes	Yes
CE	Yes	Yes

Quality Signage Displays
QF Series

49”/55”/65”

1. HDMI OUT
2. HDMI IN 1
3. HP
4. IR IN
5. HDMI IN 2
6. HDMI IN 3
7. HDMI IN 4
8. OPTICAL SPDIF
9. RJ12-SENSORS
10. RJ12
11. AUDIO IN L/R
12. DSUB9-RS232
13. VGA
14. RJ45
15. USB 2
16. USB 1

KEY SERIES FEATURES

- ADA Compliance
- SDM Ready
- Embedded CMS
- Dolby Audio Processing
- 4K HDMI @60Hz
- OPS Support
- Touch Support
- USB Secure Cover
- Carrying Handles
- IR Extender
- Detachable Logo
- Detachable Power Cord
- Playlist Creation
- SoC CMS
- HTML5 API Support
- Start Url
- Professional Design
- HDMI Wakeup
- HDMI Switching
- HDMI CEC
- HDMI Auto-Switch
- Brightness Scheduling
- Sensor Compatibility
- Improved UI
- Temperature Control
- IP Streaming Support
- Color Calibration(VW)
- Built-in Connectivity
- Built-in WiFi
- Built-in Bluetooth
- Display Control
- Usb Auto-Play
- Longer Life Span
- Sensor Support
- OSD Rotation
- Pixel Shifting
- Signal Failover
- Input Search
- Button Lock
- RCU Lock
- Menu Lock
- Device ID
- Display Lifetime
- Serial Number
- Software Upgrade
- OPS Status
- OPS Power Control
- Power-up Mode
- Power on Delay
- Auto-Launch
- Boot-up Picture
- Scheduler
- USB Cloning
- USB Operations
- USB Information
- USB Safe Eject
- Videowall Settings
- Daisychain
- Volume Limit
- Startup Volume
- Headphone Volume

QF Series

Model Name	QF49B-4H	QF55B-4H	QF65B-4H
Panel			
Screen Size	49”	55”	65”
Panel Technology	IPS	VA	IPS
Backlight Type	Edge-Type LED	Edge-Type LED	Direct-Type LED
Brightness (typical)	500 cd/m²	500 cd/m²	500 cd/m²
Native Resolution	3840 x 2160 (16:9) - UHD	3840 x 2160 (16:9) - UHD	3840 x 2160 (16:9) - UHD
Contrast Ratio (typical)	1200:1	6000:1	1200:1
Dynamic Constrast Ratio	50000:1	50000:1	50000:1
Panel Life Time (Min.)	30000 Hrs	30000 Hrs	30000 Hrs
Response Time (typical)	6 ms	8 ms	5 ms
Active Area (H x V)	1074 x 605 mm	1210 x 680 mm	1428 mm (H) x 804 mm (V)
Pixel Pitch (H x V)	0.2796 x 0.2796 mm	0.3150 x 0.3150 mm	0.372 x 0.372 mm
PPI (pixel per inch)	91	81	68
Viewing Angle	178° Vert., 178° Hor. (89U/89D/89L/89R) @ CR>10	178° Vert., 178° Hor. (89U/89D/89L/89R) @ CR>10	178° Vert., 178° Hor. (89U/89D/89L/89R) @ CR>10
Color Value	1.07 B (10-bit)	1.07 B (10-bit)	1.07 B (10-bit)
Screen Treatment	3H	3H	3H
Haze Level	1%	1%	3%
Refresh Rate	60Hz	60Hz	60 Hz
Front Type	UNB	UNB	UNB
Orientation	Horizontal	Horizontal	Horizontal
Operation Hours	16/7	16/7	16/7
Area of Usage	Indoor	Indoor	Indoor
Mainboard			
Mainboard Model	17MB135VS	17MB135VS	17MB135VS
Monitor Connectivity			
RGB Input	VGA(DE-15F)	VGA(DE-15F)	VGA(DE-15F)
RGB Output	N/A	N/A	N/A
Video Input	4xHDMI2.0, 2xUSB2.0, USB2.0(Internal)	4xHDMI2.0, 2xUSB2.0, USB2.0(Internal)	4xHDMI2.0, 2xUSB2.0, USB2.0(Internal)
Video Output	HDMI2.0	HDMI2.0	HDMI2.0
Audio Input	Line In L/R	Line In L/R	Line In L/R
Audio Output	Headphone, Optic SPDIF	Headphone, Optic SPDIF	Headphone, Optic SPDIF
External Control	RS232(DE-9F), Ethernet(RJ45), Service(RJ12)	RS232(DE-9F), Ethernet(RJ45), Service(RJ12)	RS232(DE-9F), Ethernet(RJ45), Service(RJ12)
External Sensor	RJ12	RJ12	RJ12
Mechanical			
Product Dimensions (WxDxH)	1099 x 50 (64 W/OPS) x 632 mm	1236 x 50 (64 W/OPS) x 711 mm	1455 x 52 (66 W/OPS) x 834 mm
Package Dimensions (WxDxH)	1195 x 145 x 775 mm	1369 x 145 x 874 mm	TBD
Product Weight	TBD	TBD	TBD
Package Weight	TBD	TBD	TBD
Vesa Mounting	400 x 200 mm	400 x 200 mm	400 x 400 mm
Bezel Width	B:11 | T:7 | L/R:7 mm	B:12 | T:7 | L/R:7 mm	B:13 | T:10 | L/R:10 mm
Environmental Conditions			
Operating Temperature	0-40°C	+40°C / 0°C	+40°C / 0°C
Operating Humidity	10-90%	0 to 90%	0 to 90%
Power			
Power Supply	110 VAC - 240 VAC - 50/60 Hz	110 VAC - 240 VAC - 50/60 Hz	110 VAC - 240 VAC - 50/60 Hz
Power Consumption			
Typical	TBD	TBD	TBD
Deep Standby	≤0.5W	≤0.5W	≤0.5W
Features			
Main Features	Open Content Management Support, Scheduler, USB-Autoplay, Auto-Launch, HDMI-CEC, HDMI-Wakeup, Auto-switch on Failover, Panel Lock	Open Content Management Support, Scheduler, USB-Autoplay, Auto-Launch, HDMI-CEC, HDMI-Wakeup, Auto-switch on Failover, Panel Lock	Open Content Management Support, Scheduler, USB-Autoplay, Auto-Launch, HDMI-CEC, HDMI-Wakeup, Auto-switch on Failover, Panel Lock
Mechanical Features	Joystick Rocker Switchcover, Cable Holder	Joystick Rocker Switchcover, Cable Holder	Joystick Rocker Switchcover, Cable Holder
Optional Features	N/A	N/A	N/A
Speaker	TBD	TBD	TBD
Accessory			
Standard	QSG, IB, Power Cord, Remote Control, RC Battery, Mounting Kit, Extension Brackets	QSG, IB, Power Cord, Remote Control, RC Battery, Mounting Kit, Extension Brackets	QSG, IB, Power Cord, Remote Control, RC Battery, Mounting Kit, Extension Brackets
Certification			
Safety	Yes	Yes	Yes
EMC	Yes	Yes	Yes
CE	Yes	Yes	Yes

Professional Quality Signage Displays

QM Series

43”/49”/55”

1. HDMI OUT
2. HDMI IN 1
3. HP
4. IR IN
5. HDMI IN 2
6. OPTICAL SPDIF
7. RJ12-SENSORS
8. RJ12
9. AUDIO IN L/R
10. DSUB9-RS232
11. VGA
12. RJ45
13. USB 2
14. USB 1

KEY SERIES FEATURES

- ADA Compliance
- SDM Ready
- Scheduler
- Temperature Control
- OSD Rotation
- IP Streaming Support
- Pixel Shifting
- OPS Support
- Touch Support
- USB Secure Cover
- Carrying Handles
- IR Extender
- Detachable Logo
- Detachable Power Cord
- Embedded CMS
- Dolby Audio Processing
- Playlist Creation
- SoC CMS
- HTML5 API Support
- Start Url
- Professional Design
- HDMI Wakeup
- HDMI Switching
- HDMI CEC
- HDMI Auto-Switch
- Brightness Scheduling
- Sensor Compatibility
- Improved UI
- Color Calibration(VW)
- Built-in Connectivity
- Built-in WiFi
- Built-in Bluetooth
- Display Control
- Usb Auto-Play
- Longer Life Span
- Sensor Support
- Signal Failover
- Input Search
- Button Lock
- RCU Lock
- Menu Lock
- Device ID
- Display Lifetime
- Serial Number
- Software Upgrade
- OPS Status
- OPS Power Control
- Power-up Mode
- Power on Delay
- Auto-Launch
- Boot-up Picture
- USB Cloning
- USB Operations
- USB Information
- USB Safe Eject
- Videowall Settings
- Daisychain
- Volume Limit
- Startup Volume
- Headphone Volume

QM Series

Model Name	QM49B-2H	QM55B-2H	QN65B-4F
Panel			
Screen Size	49”	55”	65”
Panel Technology	IPS	IPS	IPS
Backlight Type	Edge-Type LED	Edge-Type LED	Edge-Type LED
Brightness (typical)	500 cd/m²	500 cd/m²	500 cd/m²
Native Resolution	1920 x 1080(16:9) - FHD	1920 x 1080 (16:9) - FHD	3840 x 2160 (16:9) - UHD
Contrast Ratio (typical)	1000:1	1200:1	1200:1
Dynamic Constrast Ratio	50000:1	50000:1	50000:1
Panel Life Time (Min.)	50000 Hrs	50000 Hr	50000 Hrs
Response Time (typical)	6 ms	6 ms	8 ms
Active Area (H x V)	1074 x 605 mm	1210 x 680 mm	1428 mm (H) x 804 mm (V)
Pixel Pitch (H x V)	0.5593 x 0.5593 mm	0.630 x 0.630 mm	0.372 x 0.372 mm
PPI (pixel per inch)	45	40	68
Viewing Angle	178° Vert., 178° Hor. (89U/89D/89L/89R) @ CR>10	178° Vert., 178° Hor. (89U/89D/89L/89R) @ CR>10	178° Vert., 178° Hor. (89U/89D/89L/89R) @ CR>10
Color Value	16.7 M (8-bit)	16.7 M (8-bit)	1.07 B (10-bit)
Screen Treatment	3H	3H	3H
Haze Level	1%	1%	1%
Refresh Rate	60Hz	60Hz	60 Hz
Front Type	UNB	UNB	Ultra Narrow Bezel
Orientation	Horizontal/Vertical	Horizontal/Vertical	Horizontal / Vertical
Operation Hours	24/7	24/7	24/7
Area of Usage	Indoor	Indoor	Indoor
Mainboard			
Mainboard Model	17MB135VS	17MB135VS	17MB135VS
Monitor Connectivity			
RGB Input	VGA(DE-15F)	VGA(DE-15F)	VGA(DE-15F)
RGB Output	N/A	N/A	N/A
Video Input	2xHDMI2.0, 2xUSB2.0, USB2.0(Internal)	2xHDMI2.0, 2xUSB2.0, USB2.0(Internal)	2xHDMI2.0, 1xDP1.2a, 2xUSB2.0, USB2.0(Internal)
Video Output	HDMI2.0	HDMI2.0	HDMI2.0, DP1.2a
Audio Input	Line In L/R	Line In L/R	Line In L/R
Audio Output	Headphone, Optic SPDIF	Headphone, Optic SPDIF	Headphone, Optic SPDIF
External Control	RS232(DE-9F), Ethernet(RJ45), Service(RJ12)	RS232(DE-9F), Ethernet(RJ45), Service(RJ12)	RS232(DE-9F), Ethernet(RJ45), Service(RJ12)
External Sensor	RJ12	RJ12	RJ12
Mechanical			
Product Dimensions (WxDxH)	1099 x 50 (64 W/OPS) x 632 mm	1236 x 50 (64 W/OPS) x 711 mm	1455 x 52 (66 W/OPS) x 834 mm
Package Dimensions (WxDxH)	1195 x 145 x 775 mm	1369 x 145 x 874 mm	TBD
Product Weight	TBD	TBD	TBD
Package Weight	TBD	TBD	TBD
Vesa Mounting	400 x 200 mm	400 x 200 mm	400 x 400 mm
Bezel Width	B:11 | T:7 | L/R:7 mm	B:12 | T:7 | L/R:7 mm	B:13 | T:10 | L/R:10 mm
Environmental Conditions			
Operating Temperature	0-40°C	+40°C / 0°C	+40°C / 0°C
Operating Humidity	10-90%	0 to 90%	0 to 90%
Power			
Power Supply	110 VAC - 240 VAC - 50/60 Hz	110 VAC - 240 VAC - 50/60 Hz	110 VAC - 240 VAC - 50/60 Hz
Power Consumption			
Typical	TBD	TBD	TBD
Deep Standby	≤0.5W	≤0.5W	≤0.5W
Features			
Main Features	Open Content Management Support, Scheduler, USB-Autoplay, Auto-Launch, HDMI-CEC, HDMI-Wakeup, Auto-switch on Failover, Panel Lock	Open Content Management Support, Scheduler, USB-Autoplay, Auto-Launch, HDMI-CEC, HDMI-Wakeup, Auto-switch on Failover, Panel Lock	Open Content Management Support, Scheduler, USB-Autoplay, Auto-Launch, HDMI-CEC, HDMI-Wakeup, Auto-switch on Failover, Panel Lock
Mechanical Features	Joystick, IR Extender Support, Rocker Switch, Detachable power cable, Carrying slots, Detachable logo positioning, Internal usb cover, Cable Holder	Joystick, IR Extender Support, Rocker Switch, Detachable power cable, Carrying slots, Detachable logo positioning, Internal usb cover, Cable Holder	Joystick, IR Extender Support, Rocker Switch, Detachable power cable, Carrying slots, Detachable logo positioning, Internal usb cover, Cable Holder
Optional Features	OPS Compliance, IR Overlay Touch Compliance	OPS Compliance, IR Overlay Touch Compliance	OPS Compliance, IR Overlay Touch Compliance
Speaker	TBD	TBD	TBD
Accessory			
Standard	QSG, IB, Power Cord, Remote Control, RC Battery, Mounting Kit, Extension Brackets, IR Extender Cable	QSG, IB, Power Cord, Remote Control, RC Battery, Mounting Kit, Extension Brackets, IR Extender Cable	QSG, IB, Power Cord, Remote Control, RC Battery, Mounting Kit, Extension Brackets, IR Extender Cable
Certification			
Safety	Yes	Yes	Yes
EMC	Yes	Yes	Yes
CE	Yes	Yes	Yes

High Bright Quality Signage Displays

QP Series

49”/55”

1. HDMI OUT
2. HDMI IN 1
3. HP
4. IR IN
5. HDMI IN 2
6. HDMI IN 3
7. HDMI IN 4
8. OPTICAL SPDIF
9. RJ12-SENSORS
10. RJ12
11. AUDIO IN L/R
12. DSUB9-RS232
13. VGA
14. RJ45
15. USB 2
16. USB 1

KEY SERIES FEATURES

- ADA Compliance
- SDM Ready
- Brightness Scheduling
- Sensor Compatibility
- Scheduler
- Temperature Control
- OSD Rotation
- IP Streaming Support
- Pixel Shifting
- OPS Support
- Touch Support
- USB Secure Cover
- Carrying Handles
- IR Extender
- Detachable Logo
- Detachable Power Cord
- Embedded CMS
- Dolby Audio Processing
- Playlist Creation
- SoC CMS
- HTML5 API Support
- Start Url
- Professional Design
- HDMI Wakeup
- HDMI Switching
- HDMI CEC
- HDMI Auto-Switch
- Improved UI
- Color Calibration(VW)
- Built-in Connectivity
- Built-in WiFi
- Built-in Bluetooth
- Display Control
- Usb Auto-Play
- Longer Life Span
- Sensor Support
- Signal Failover
- Input Search
- Button Lock
- RCU Lock
- Menu Lock
- Device ID
- Display Lifetime
- Serial Number
- Software Upgrade
- OPS Status
- OPS Power Control
- Power-up Mode
- Power on Delay
- Auto-Launch
- Boot-up Picture
- USB Cloning
- USB Operations
- USB Information
- USB Safe Eject
- Videowall Settings
- Daisychain
- Volume Limit
- Startup Volume
- Headphone Volume

QP Series

Model Name	QP49B-4H	QP55B-4H
Panel		
Screen Size	49”	55”
Panel Technology	IPS	IPS
Backlight Type	Edge-Type LED	Edge-Type LED
Brightness (typical)	700 cd/m²	700 cd/m²
Native Resolution	1920 x 1080(16:9) - FHD	1920 x 1080 (16:9) - FHD
Contrast Ratio (typical)	1000:1	1200:1
Dynamic Constrast Ratio	50000:1	50000:1
Panel Life Time (Min.)	50000 Hrs	50000 Hr
Response Time (typical)	6 ms	6 ms
Active Area (H x V)	1074 x 605 mm	1210 x 680 mm
Pixel Pitch (H x V)	0.5593 x 0.5593 mm	0.630 x 0.630 mm
PPI (pixel per inch)	45	40
Viewing Angle	178° Vert., 178° Hor. (89U/89D/89L/89R) @ CR>10	178° Vert., 178° Hor. (89U/89D/89L/89R) @ CR>10
Color Value	16.7 M (8-bit)	16.7 M (8-bit)
Screen Treatment	3H	3H
Haze Level	1%	1%
Refresh Rate	60Hz	60Hz
Front Type	UNB	UNB
Orientation	Horizontal/Vertical	Horizontal/Vertical
Operation Hours	24/7	24/7
Area of Usage	Indoor	Indoor
Mainboard		
Mainboard Model	17MB135VS	17MB135VS
Monitor Connectivity		
RGB Input	VGA(DE-15F)	VGA(DE-15F)
RGB Output	N/A	N/A
Video Input	4xHDMI2.0, 2xUSB2.0, USB2.0(Internal)	4xHDMI2.0, 2xUSB2.0, USB2.0(Internal)
Video Output	HDMI2.0	HDMI2.0
Audio Input	Line In L/R	Line In L/R
Audio Output	Headphone, Optic SPDIF	Headphone, Optic SPDIF
External Control	RS232(DE-9F), Ethernet(RJ45), Service(RJ12)	RS232(DE-9F), Ethernet(RJ45), Service(RJ12)
External Sensor	RJ12	RJ12
Mechanical		
Product Dimensions (WxDxH)	1099 x 50 (64 W/OPS) x 632 mm	1236 x 50 (64 W/OPS) x 711 mm
Package Dimensions (WxDxH)	1195 x 145 x 775 mm	1369 x 145 x 874 mm
Product Weight	TBD	TBD
Package Weight	TBD	TBD
Vesa Mounting	400 x 200 mm	400 x 200 mm
Bezel Width	B:11 | T:7 | L/R:7 mm	B:12 | T:7 | L/R:7 mm
Environmental Conditions		
Operating Temperature	0-40°C	+40°C / 0°C
Operating Humidity	10-90%	0 to 90%
Power		
Power Supply	110 VAC - 240 VAC - 50/60 Hz	110 VAC - 240 VAC - 50/60 Hz
Power Consumption		
Typical	TBD	TBD
Deep Standby	≤0.5W	≤0.5W
Features		
Main Features	Open Content Management Support, Scheduler, USB-Autoplay, Auto-Launch, HDMI-CEC, HDMI-Wakeup, Auto-switch on Failover, Panel Lock	Open Content Management Support, Scheduler, USB-Autoplay, Auto-Launch, HDMI-CEC, HDMI-Wakeup, Auto-switch on Failover, Panel Lock
Mechanical Features	Joystick, IR Extender Support, Rocker Switch, Detachable power cable, Carrying slots, Detachable logo positioning, Internal usb cover, Cable Holder	Joystick, IR Extender Support, Rocker Switch, Detachable power cable, Carrying slots, Detachable logo positioning, Internal usb cover, Cable Holder
Optional Features	OPS Compliance, IR Overlay Touch Compliance	OPS Compliance, IR Overlay Touch Compliance
Speaker	TBD	TBD
Accessory		
Standard	QSG, IB, Power Cord, Remote Control, RC Battery, Mounting Kit, Extension Brackets, IR Extender Cable	QSG, IB, Power Cord, Remote Control, RC Battery, Mounting Kit, Extension Brackets, IR Extender Cable
Certification		
Safety	Yes	Yes
EMC	Yes	Yes
CE	Yes	Yes

ED24V78/D

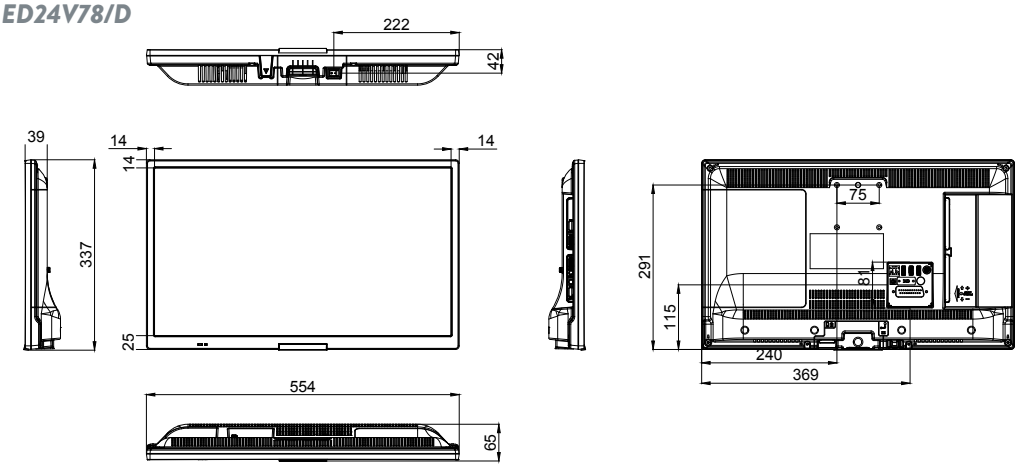

ED32V78/D

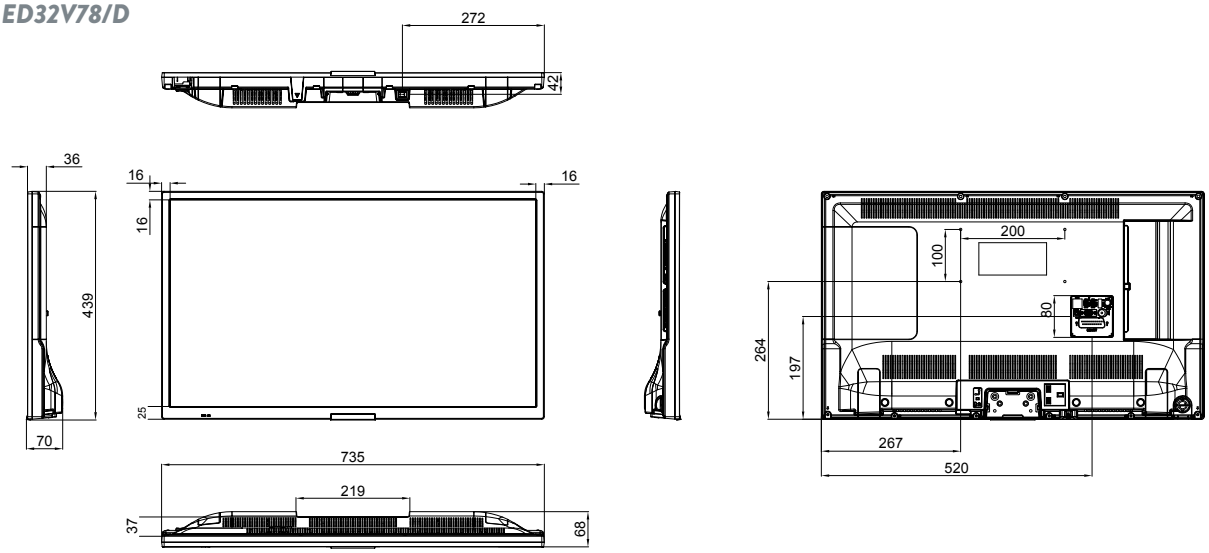

ED43V78/D

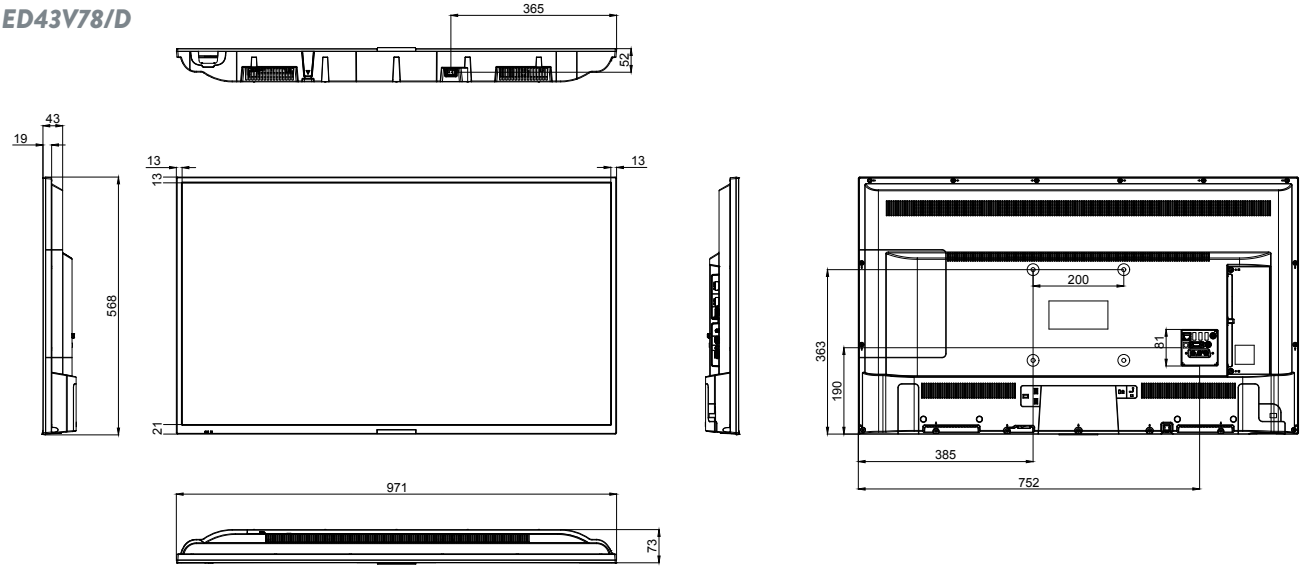

STM43UH82/2

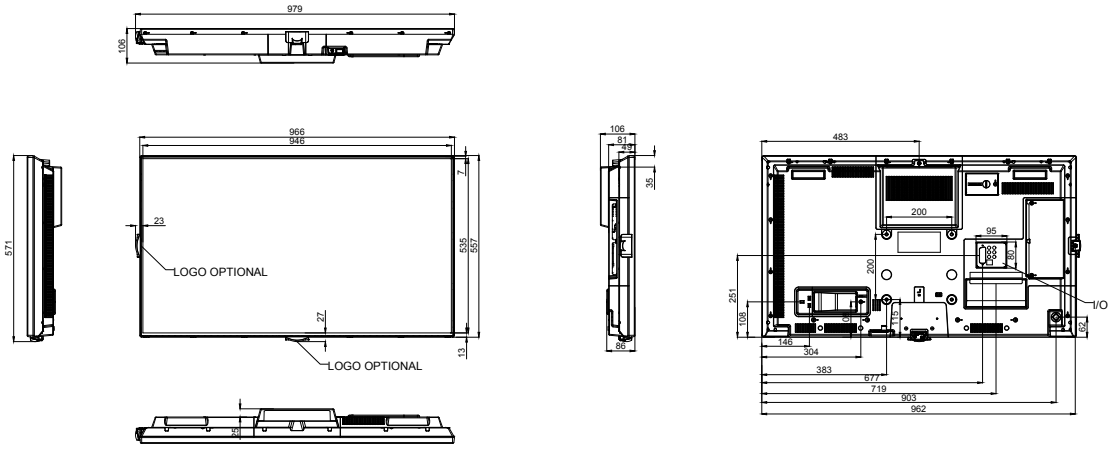

STM49UH82/2

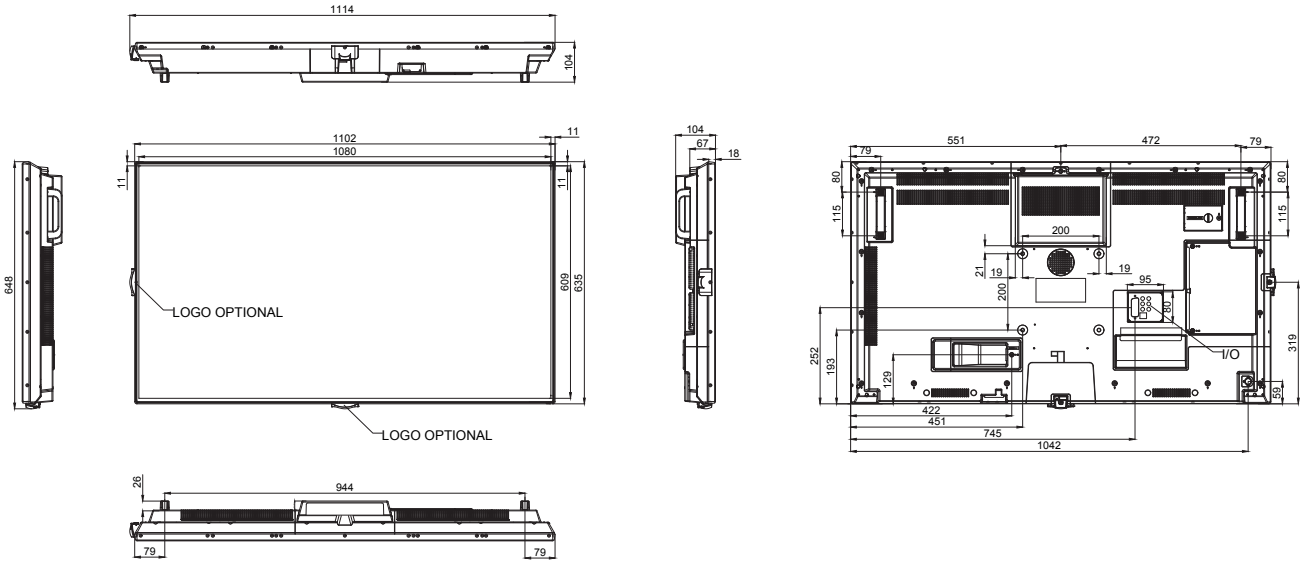

UHM Series

UHM55UH82/4

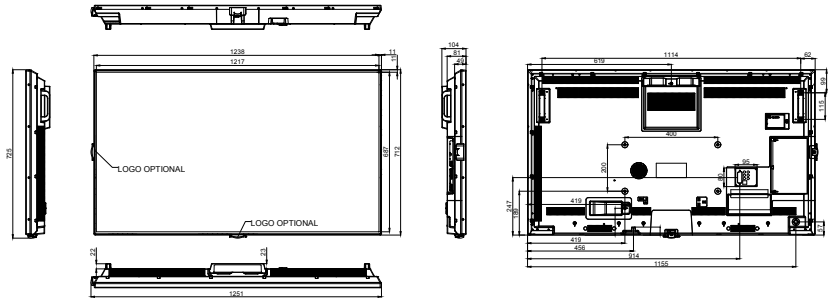

UHM65UH82/4

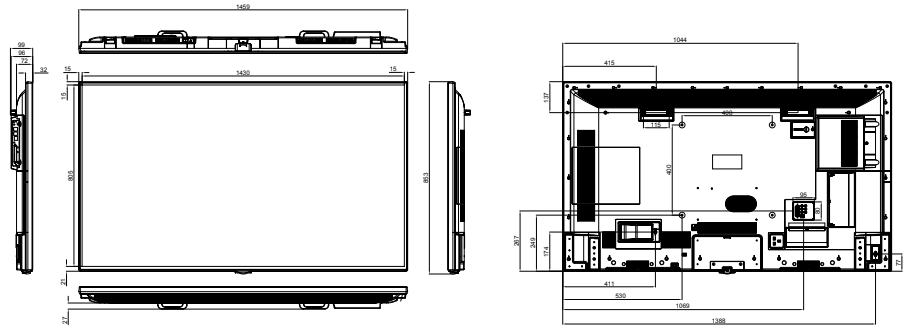

UHM75UH83/4

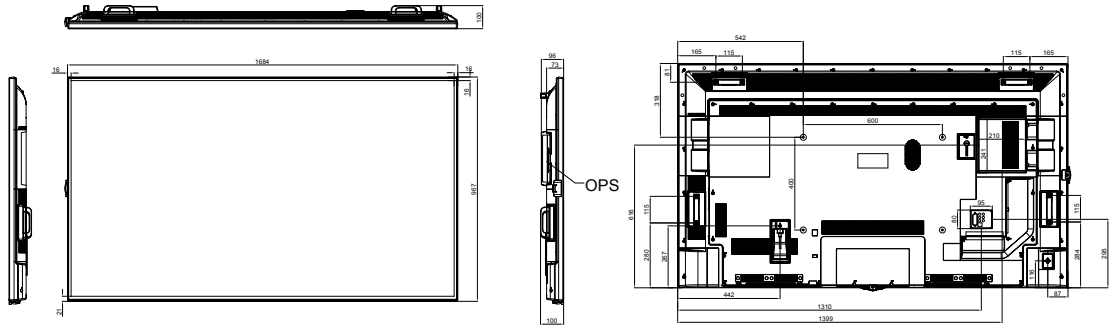

UHM86SH80B/4

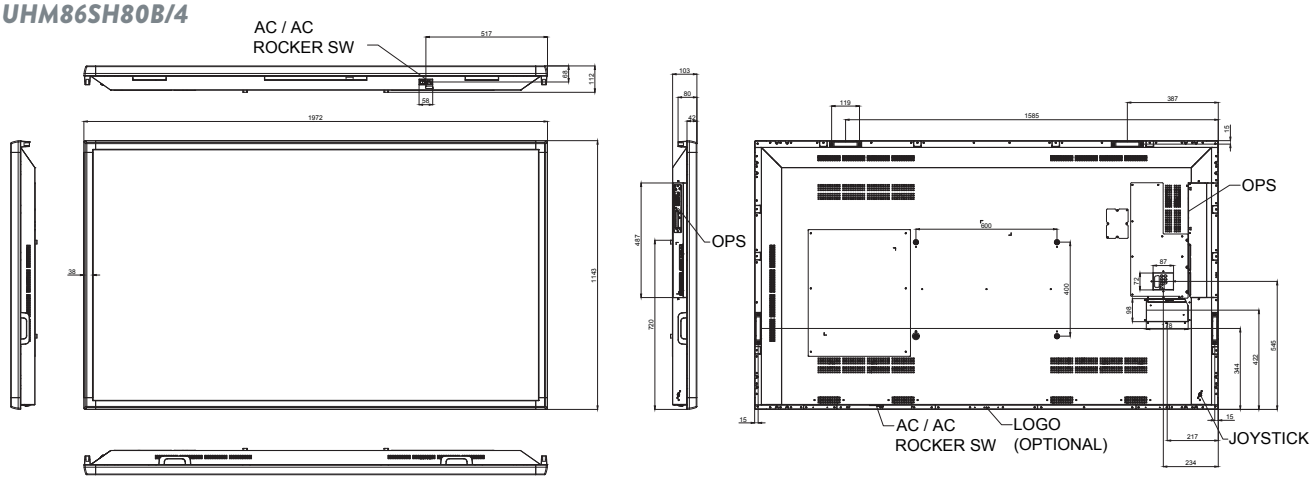

PDM43UH82/2

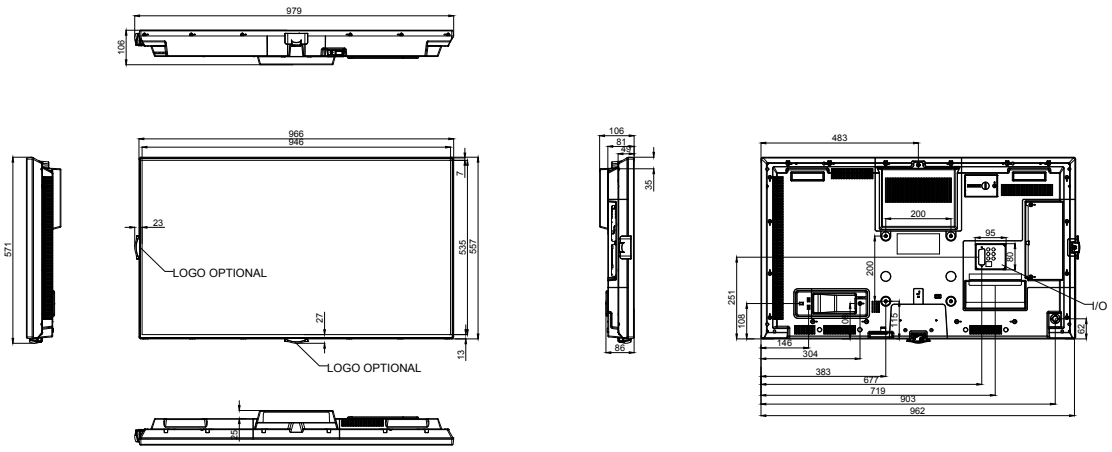

PDM49UH82/2

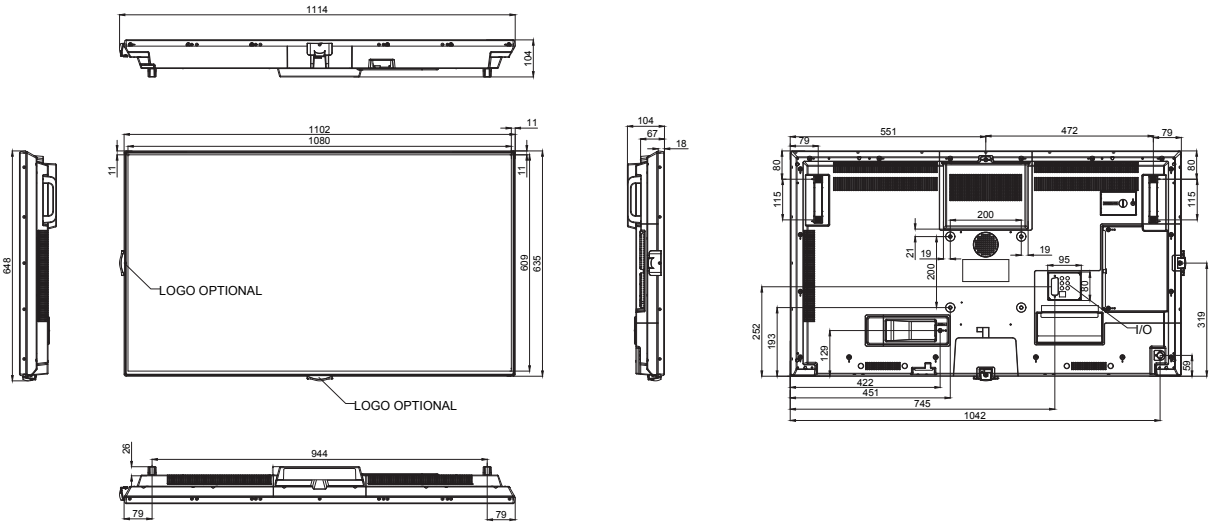

PDM55UH82/2

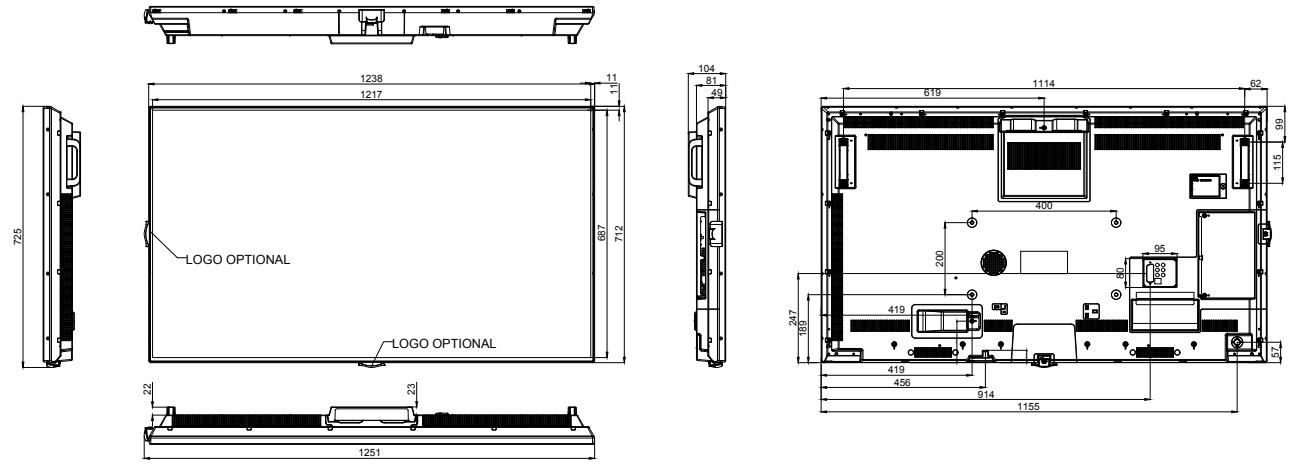

PDH43UH82/4

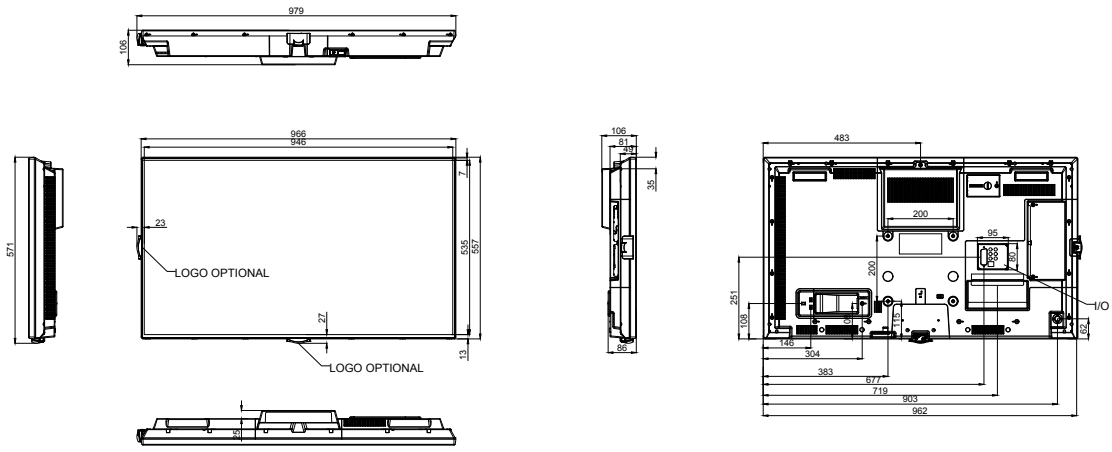

PDH49UH82/4

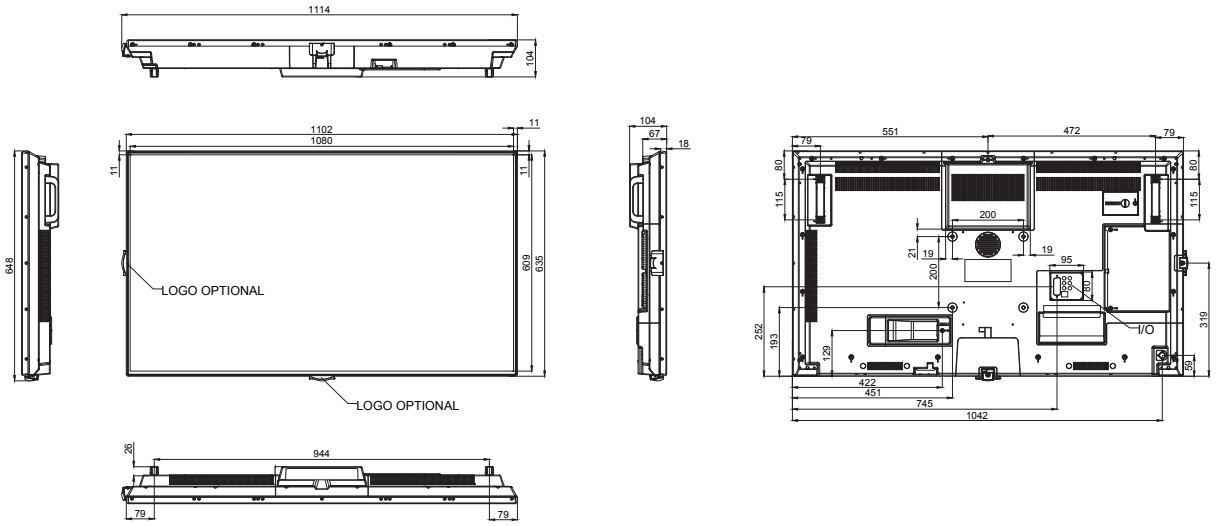

PDH55UH82/4

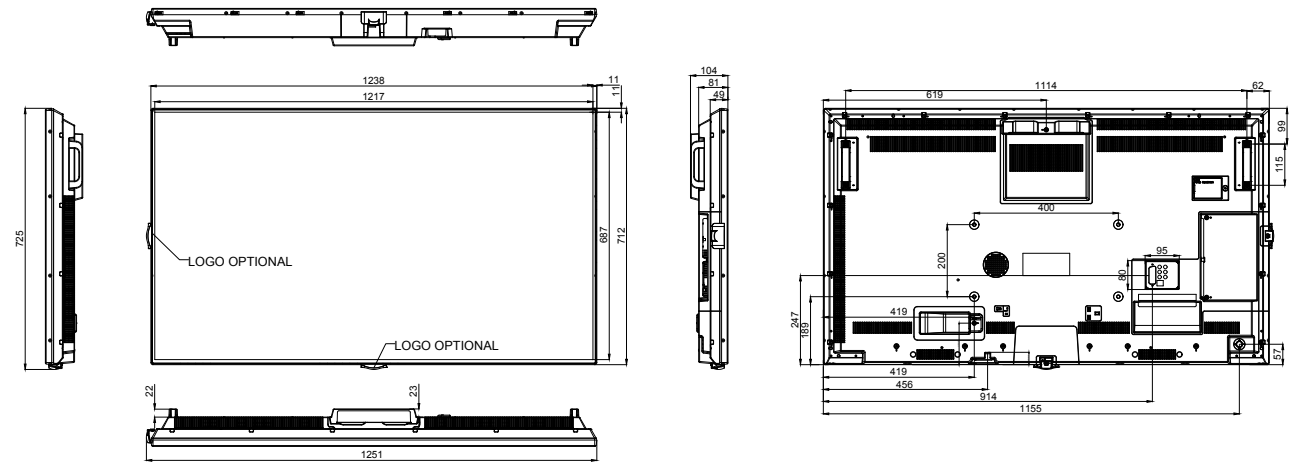

PDU Series

PDU65UF82/4

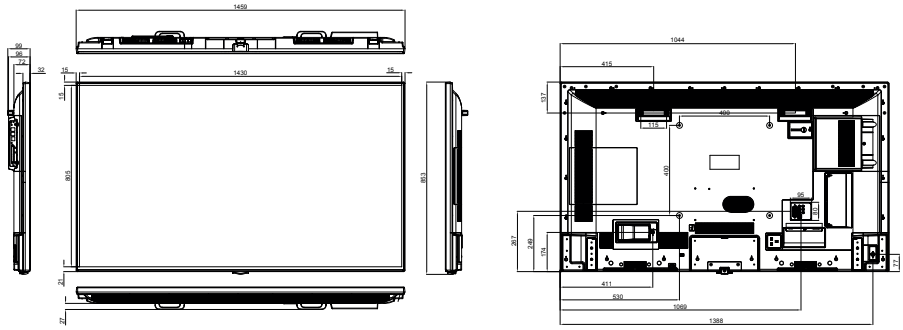

PDU75UF83/4

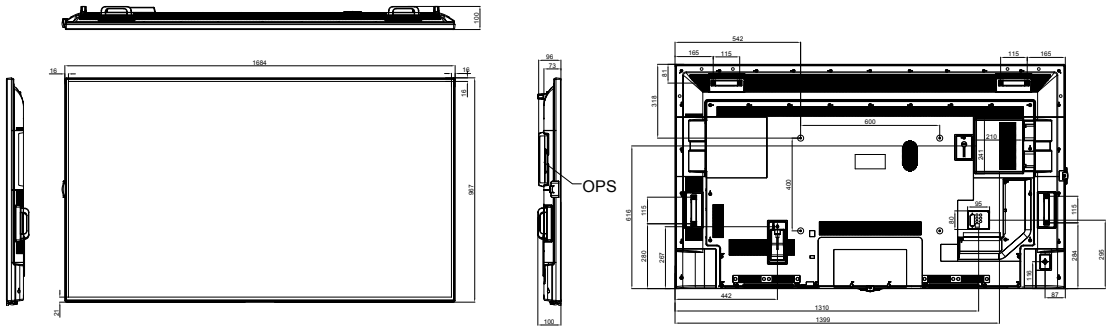

PDU86SF80B/4

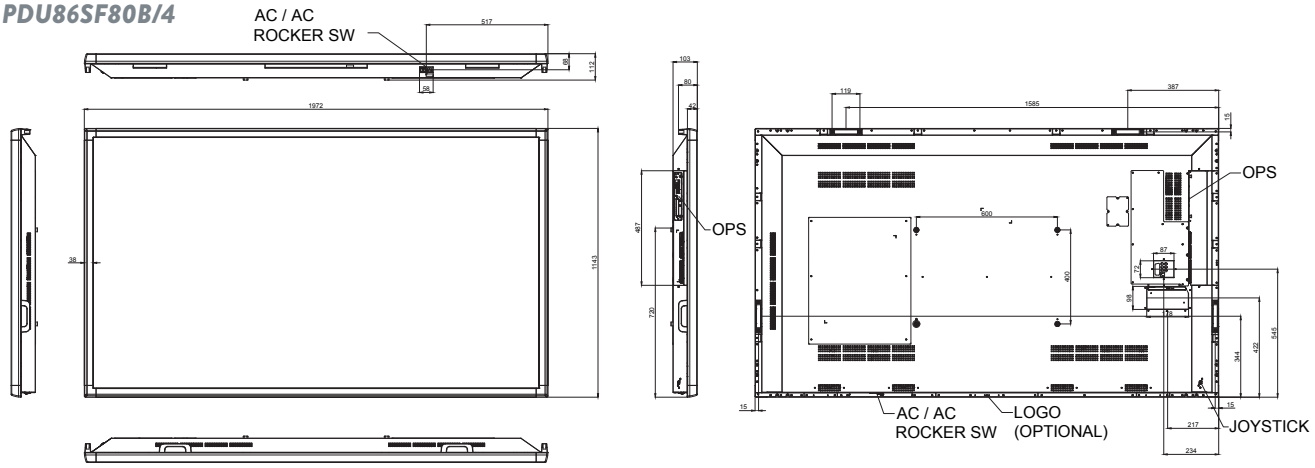

PDU98SF81B/4

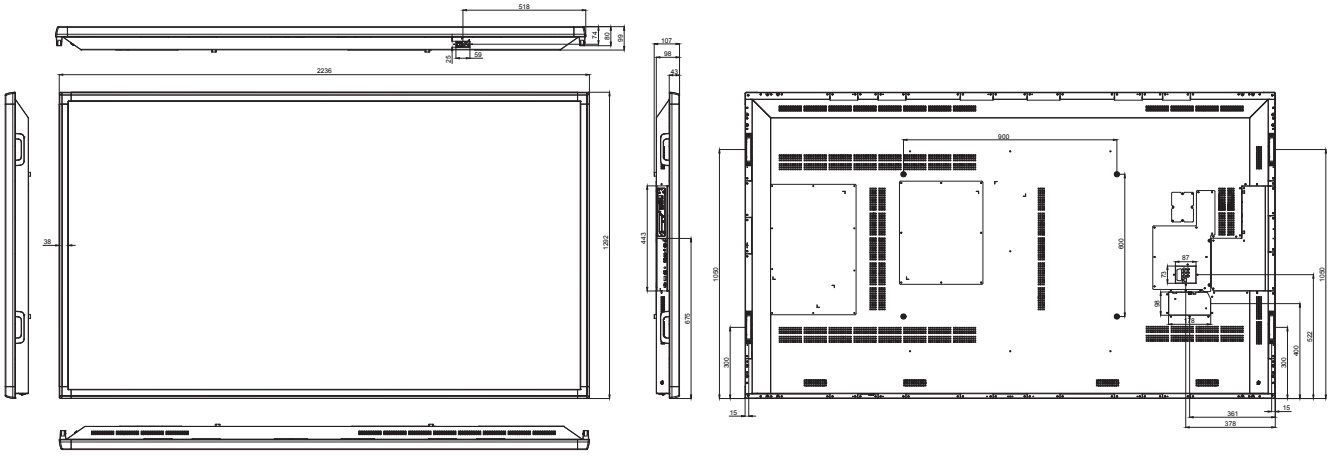

PDX55SF87/4

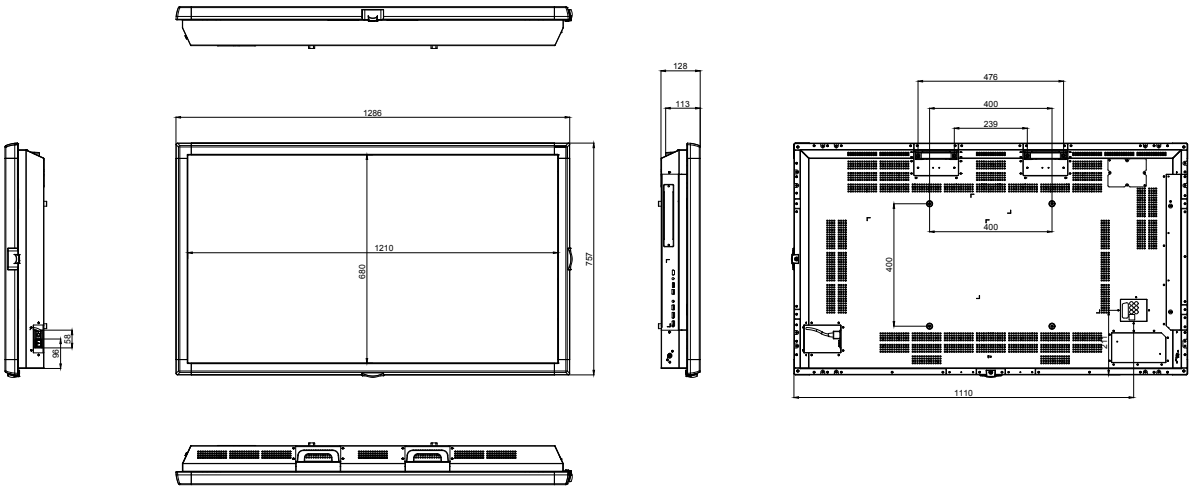

PDX75SF87/4

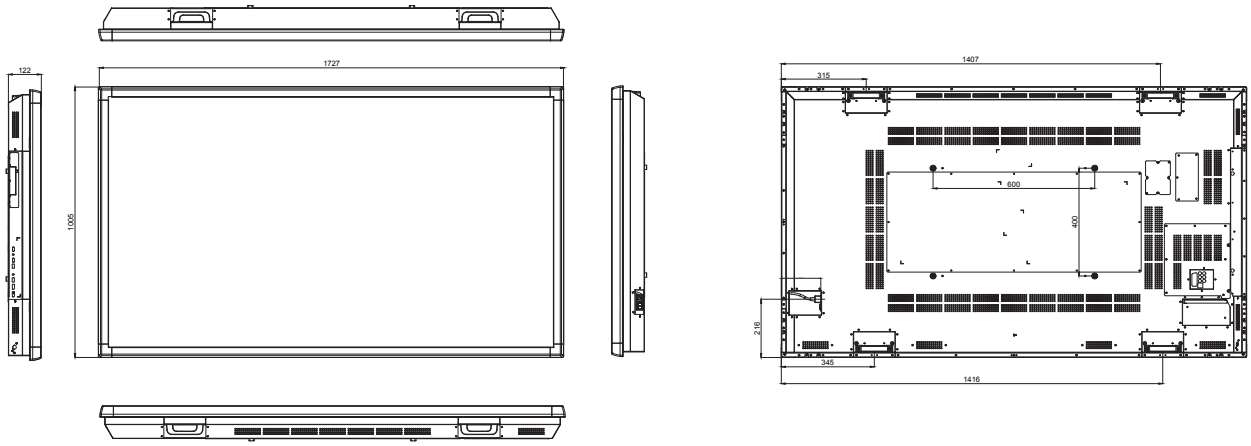

PDX55UF86/4

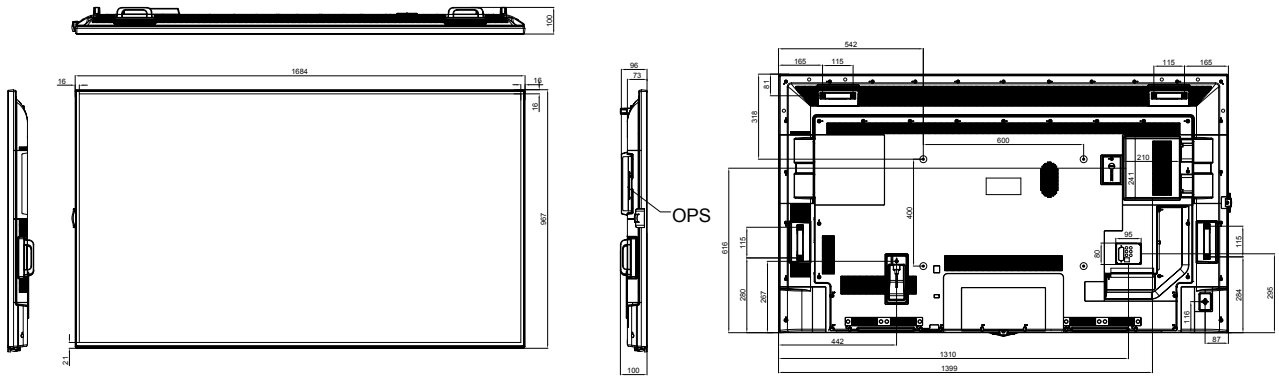

TO-65SS

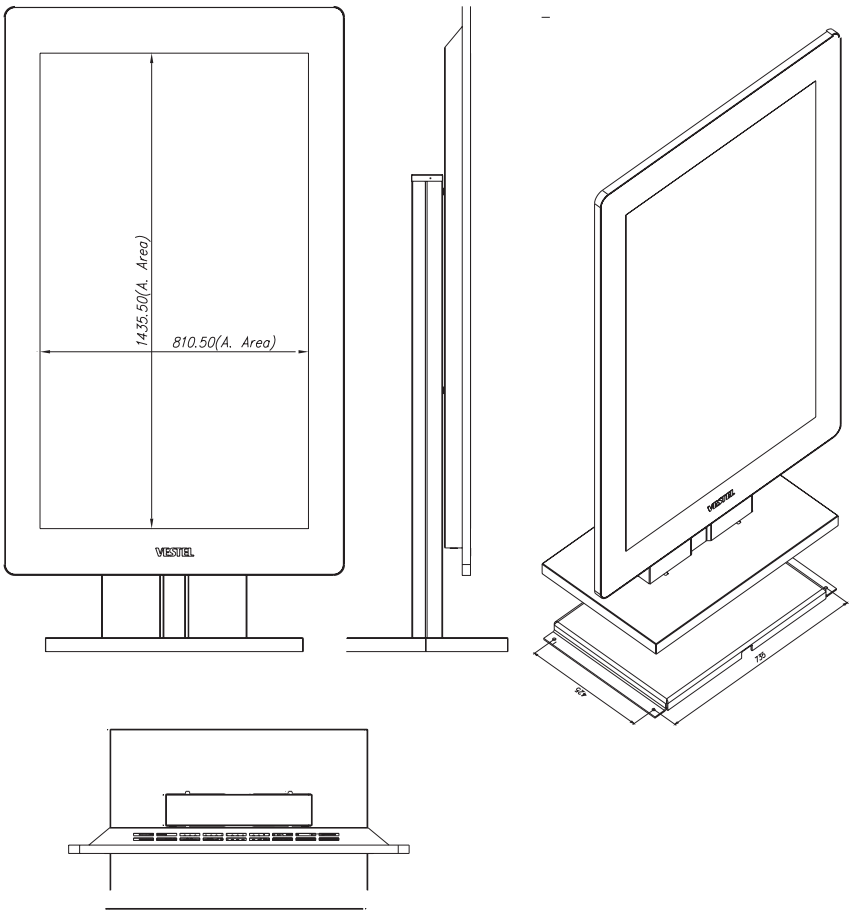

TD-65DS

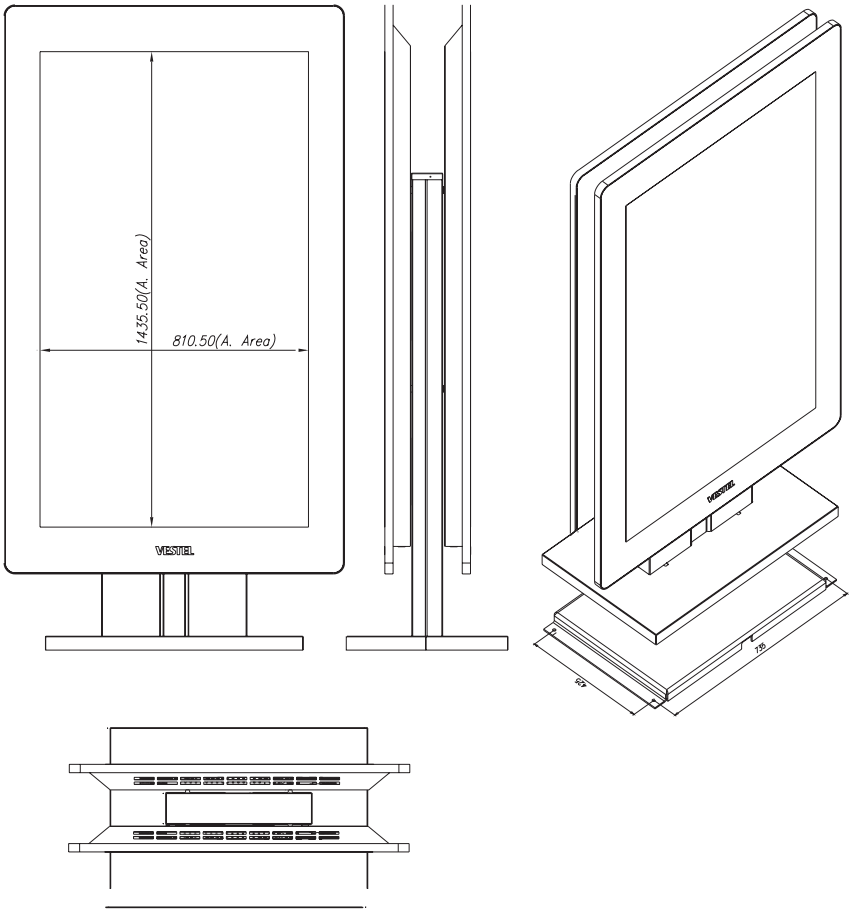

VB49B-2 / VM49B-4H

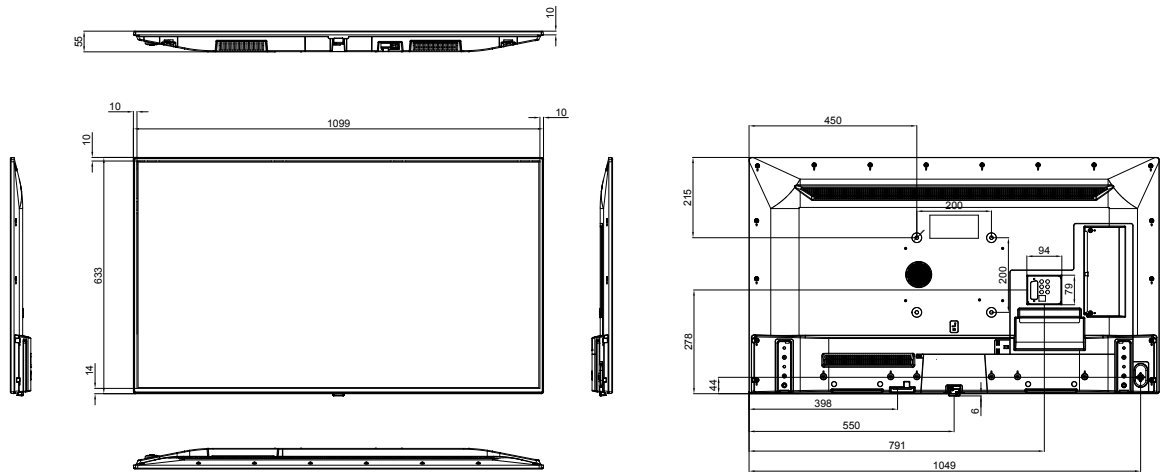

VB55B-2 / VM55B-4H

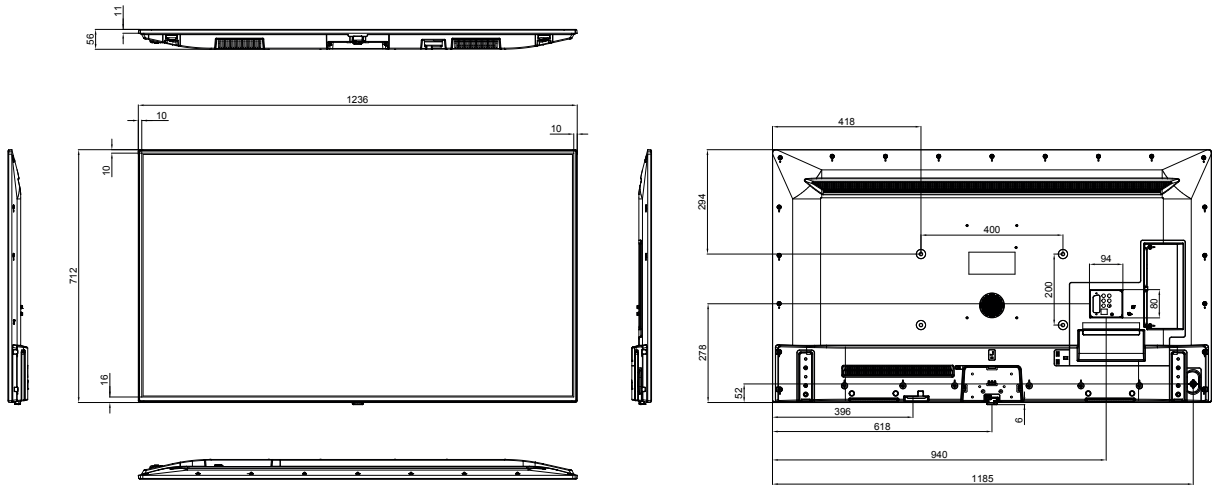

QF49B-4H / QM49B-2H / QP49B-4H

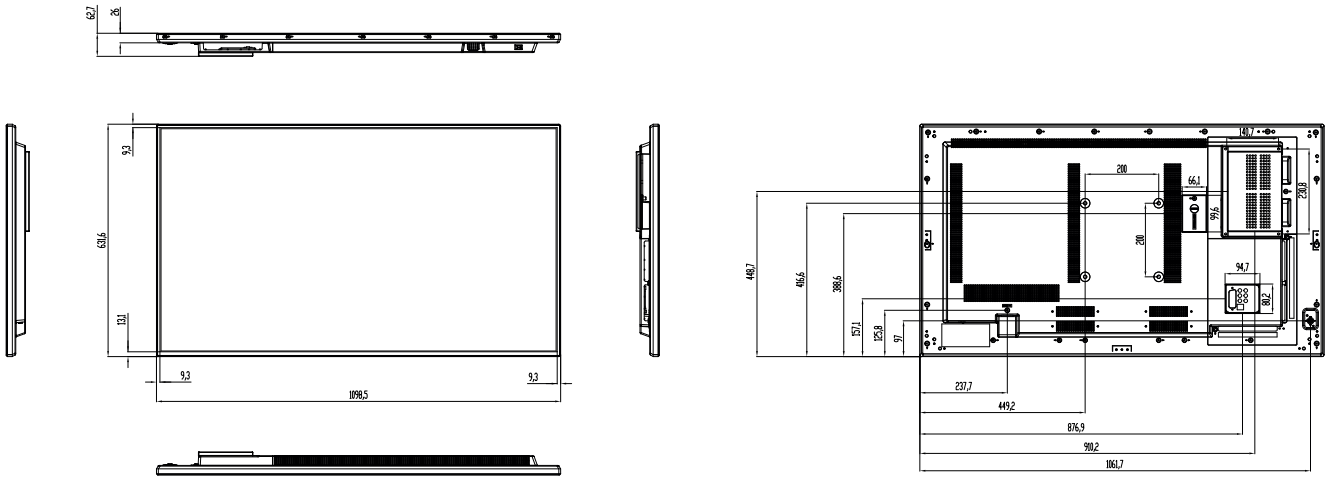

QF55B-4H / QM55B-2H / QP55B-4H

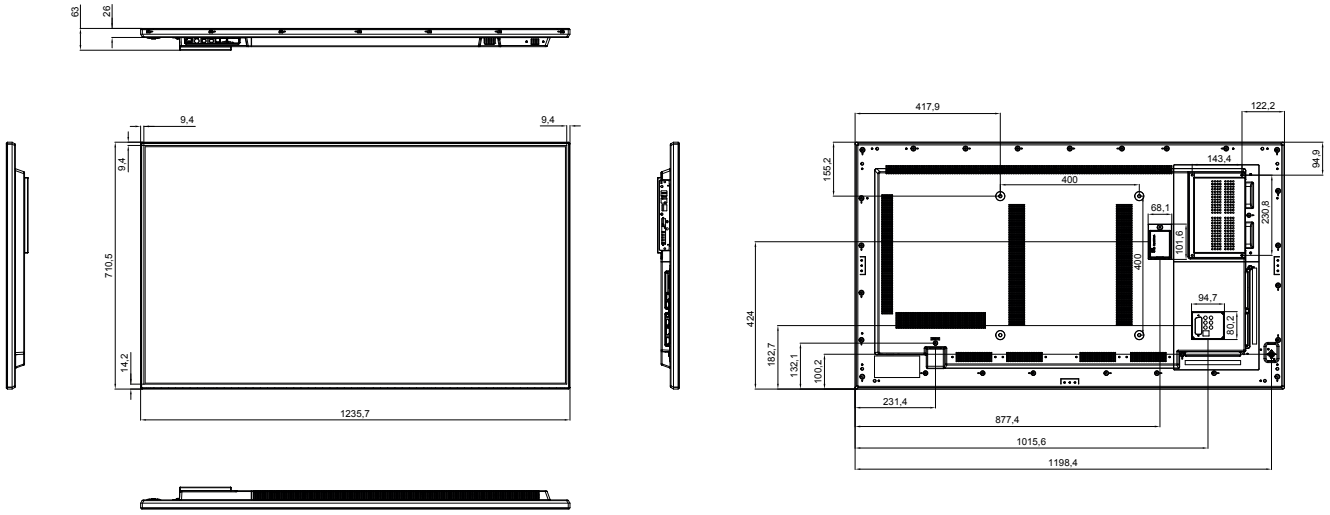

QF65B-4H / QN65B-4F

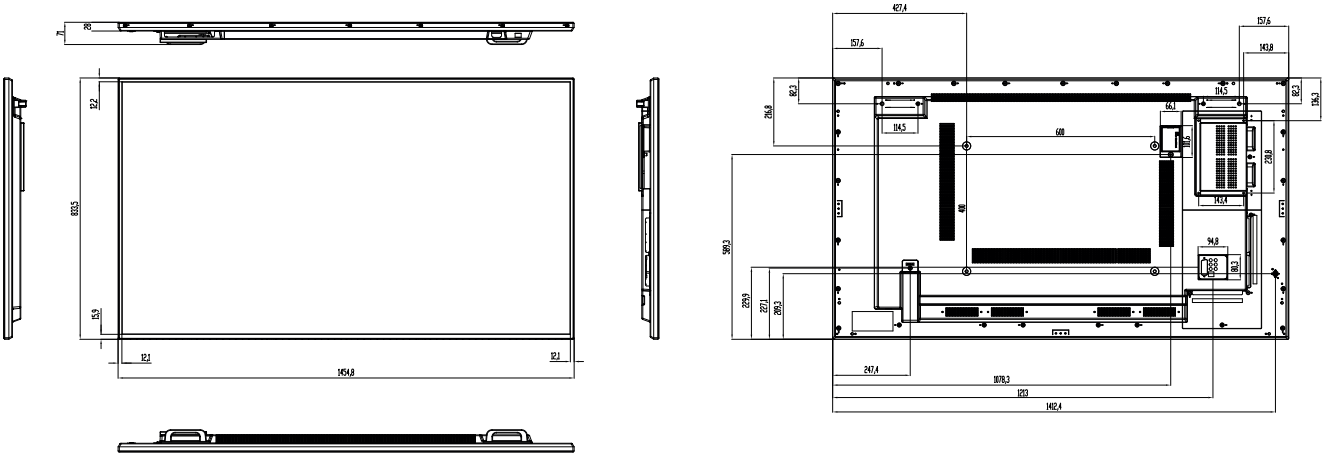

Accessories

Plug-in OPS Module

OPSSL650

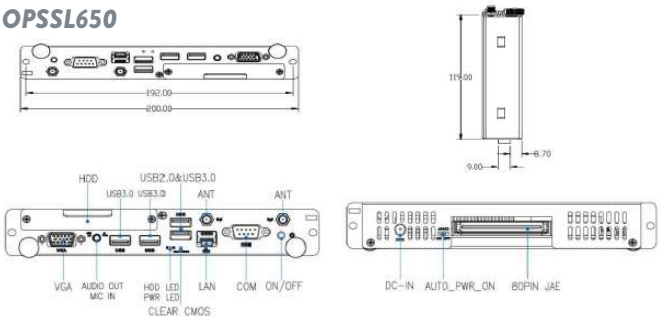

OPS150

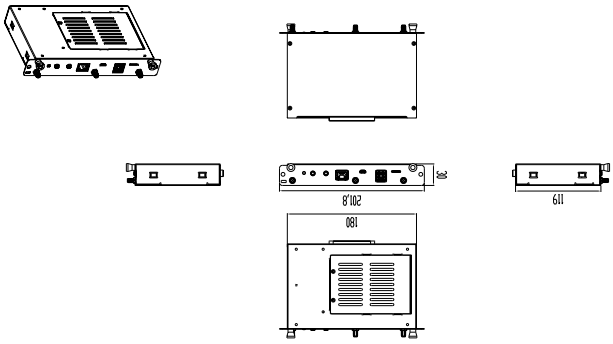

OPSKL756V

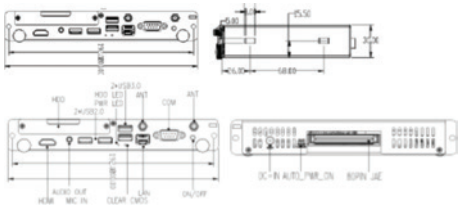

OPSKL3865

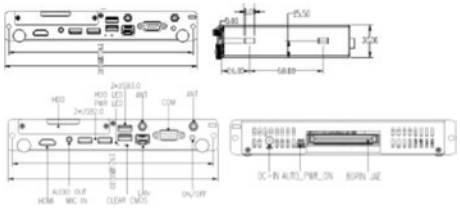

Motorized Stand

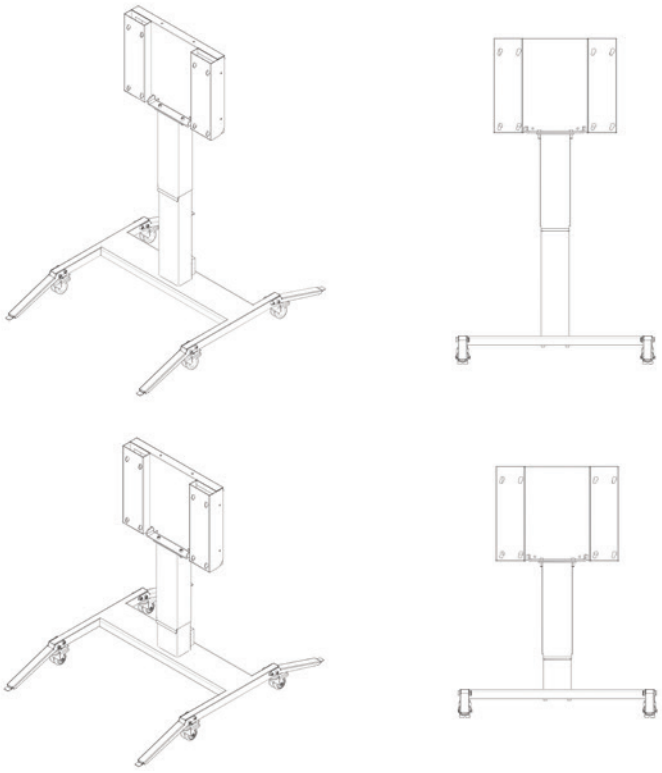

Touch Overlay

TCH43IR01

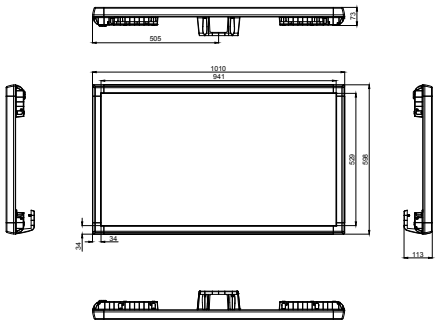

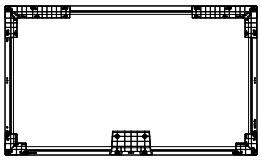

TCH49IR01

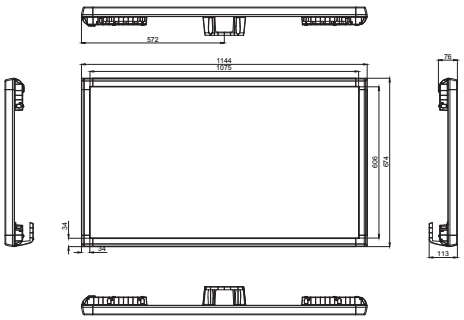

TCH55IR01

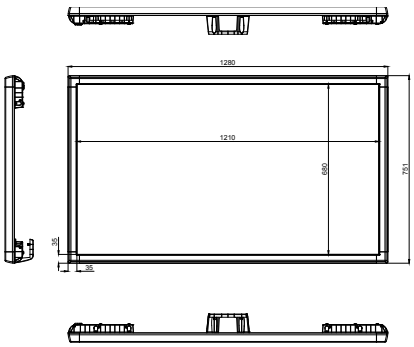

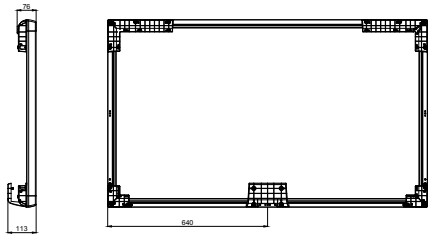

TCH65IR01

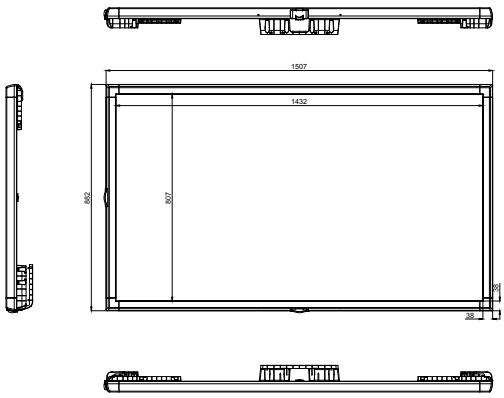

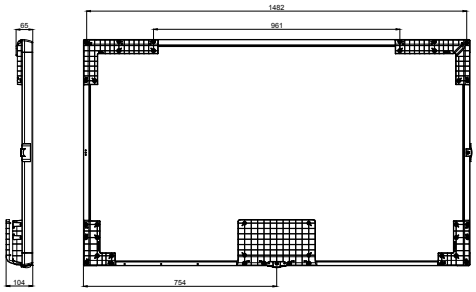

TCH75IR01

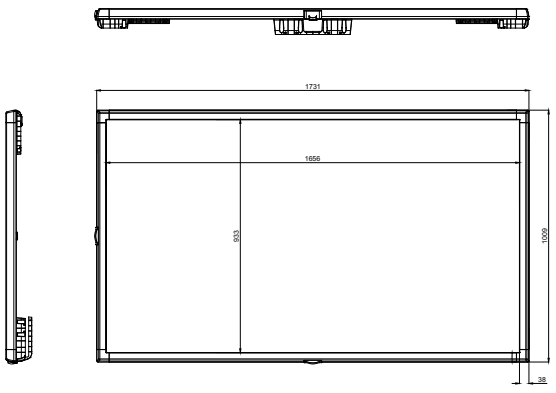

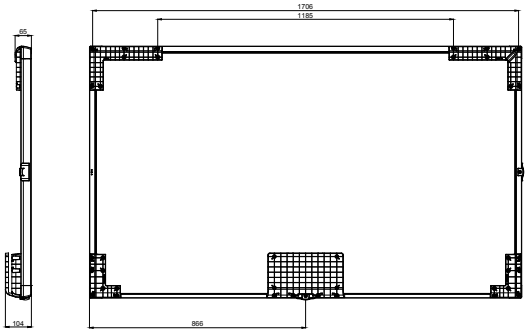

NOTES

Vestel Trade Co.
Organize Sanayi Bolgesi, 45030 Manisa/Turkey
Phone: 90 - 236 233 25 82
Fax: 90 - 236 233 25 84
vesteltrade@vestel.com.tr
www.vestelinternational.com

Vestel Germany GmbH
Parkring 6 D-85748 Garching
bei München/Germany
Phone: 49 - 89 55295 - 0
Fax: 49 - 89 55295 - 2000
info@vestel-germany.de
www.vestel-germany.de
vs.vestel.eu

Vestel UK Ltd
Vestel House, Waterside Drive
Langley, Berkshire SL3 6EZ
Phone: 44 - 3330 146 400
info@vestel-uk.com
www.vestel.co.uk

Vestel France SASU
17 Rue de la Couture - Parc Icade
BP 10190 - 94563 RUNGIS Cedex/France
Phone: 33 - 1 46 75 00 29
Fax: 33 - 1 41 80 99 31
info@vestel.fr
www.vestel-france.fr

Vestel Benelux B.V.
Stationsplein 45, A1-194
3013 AK Rotterdam,
The Netherlands
Phone: 31 - 10 235 1005
info@vestelbenelux.nl
www.vestelbenelux.nl

Vestel Iberia, S. L.
Paeso Doce Estrellas, 2, 3o. 28042. Madrid, Spain
Phone: 34 - 91 320 63 98
Fax: 34 - 91 320 52 58
vestel@vestel.es
www.vestel.es

Vestel CIS Ltd.
1-st Graivoronovsky Proezd, No.20 Building 16,
109518, Moscow /Russia
Phone: 7 - 095 956 8230
Fax: 7 - 095 956 8233
info@vestel.ru
www.vestel.ru

Vestel Electronics Gulf DMCC
Unit No: ALMAS-06-C ALMAS Tower Plot
No: JLT-PH1-A0
Jumeirah Lakes Towers Dubai Bae
info@vestel-gulf.ae
www.vestel-gulf.ae

TOO Vestel Central Asia
050026 Kazakhsatan/Almaty Aiteke bi 187,
office: 215
Phone: 7 - 727 263 39 39
info@vestel.kz

Vestel Poland Sp. z o.o.
ul. Salsy 2, 02-822 Warszawa, Polska
Phone: 48 22 272 73 11
info@vestel-poland.com
www.vestel-poland.com

Vestel Electronica
Bucharest, 1st District, 2-4 Murmurului Entrance,
014114 Bucharest/Romania
Phone: 40 - 31 425 42 93
Fax: 40 -31 425 42 95
office@vestel.ro
www.vestel.ro